RITMICA ALUMINUM
ASSEMBLY INSTRUCTIONS

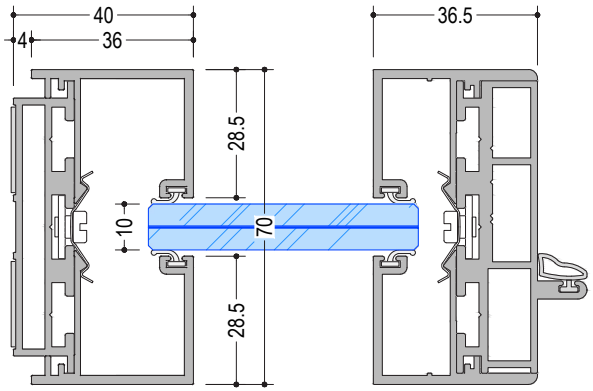

Ritmica D1

Partition wall with single 5+5 or 10 mm thick glass

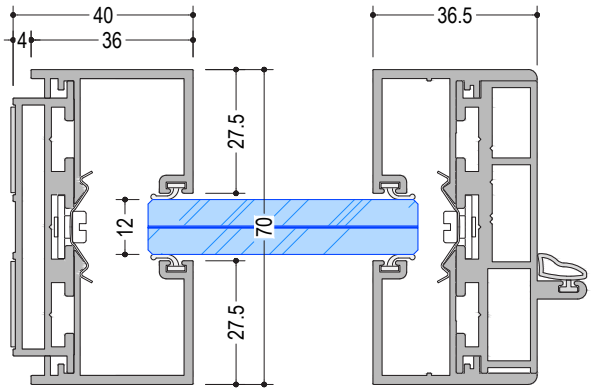

Ritmica D1

Partition wall with single 6+6 or 12 mm thick glass

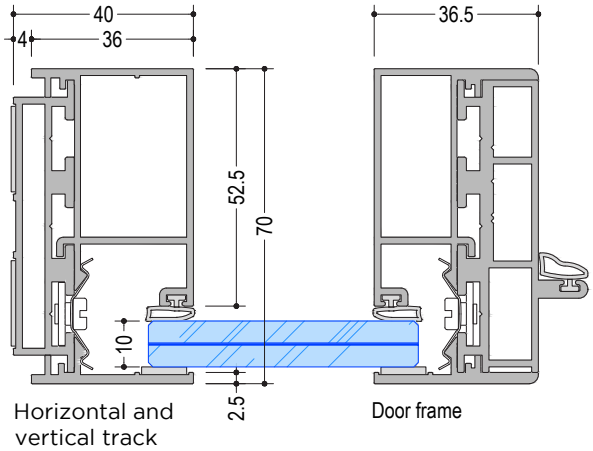

Ritmica DA

Partition wall with single, side mounted, 5+5 or 10 mm thick glass

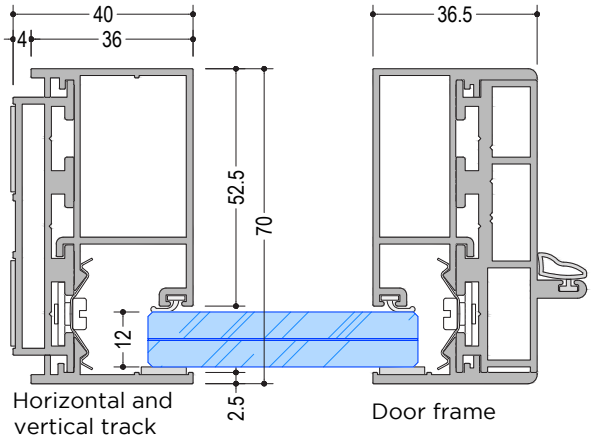

Ritmica DA

Partition wall with single, side mounted, 6+6 or 12 mm thick glass

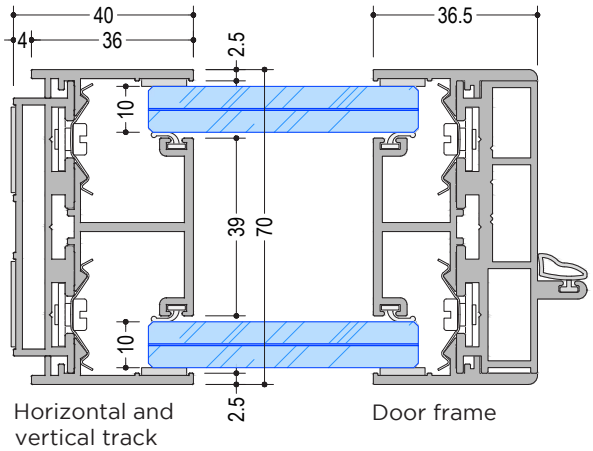

Ritmica D2

Partition wall with double 5+5 or 10 mm thick glasses

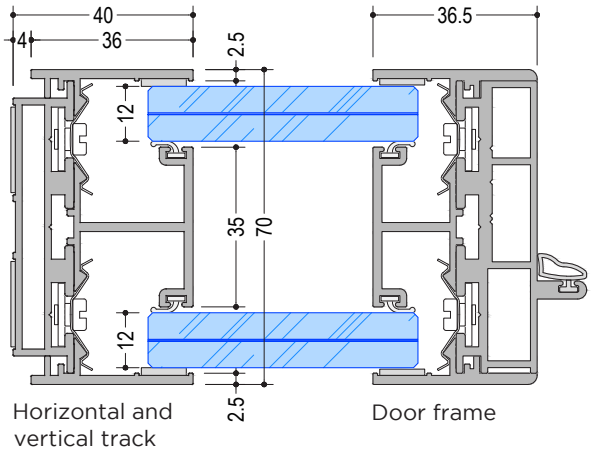

Ritmica D2

Partition wall with double 6+6 or 12 mm thick glasses

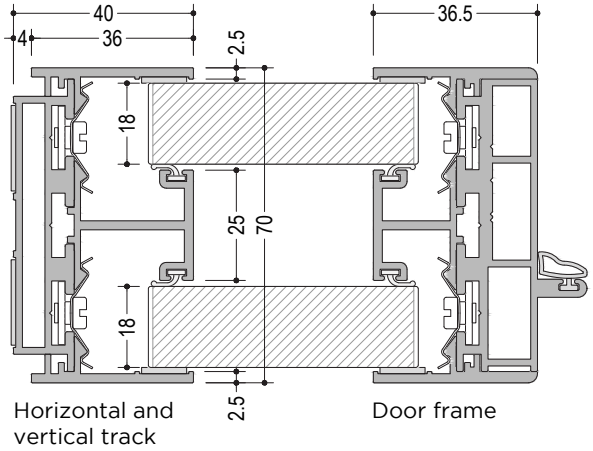

Ritmica solid

Partition wall with 18 mm thick solid panels

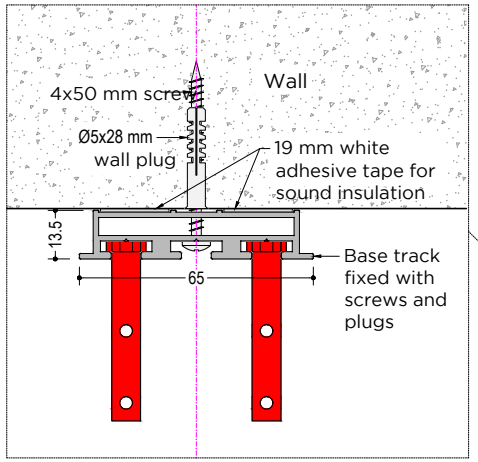

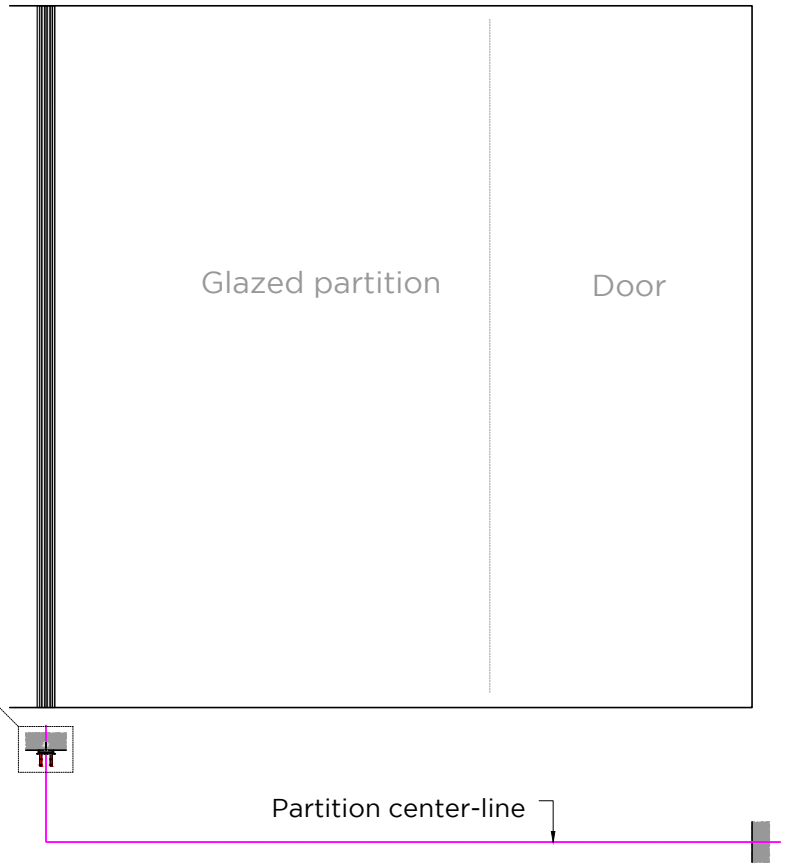

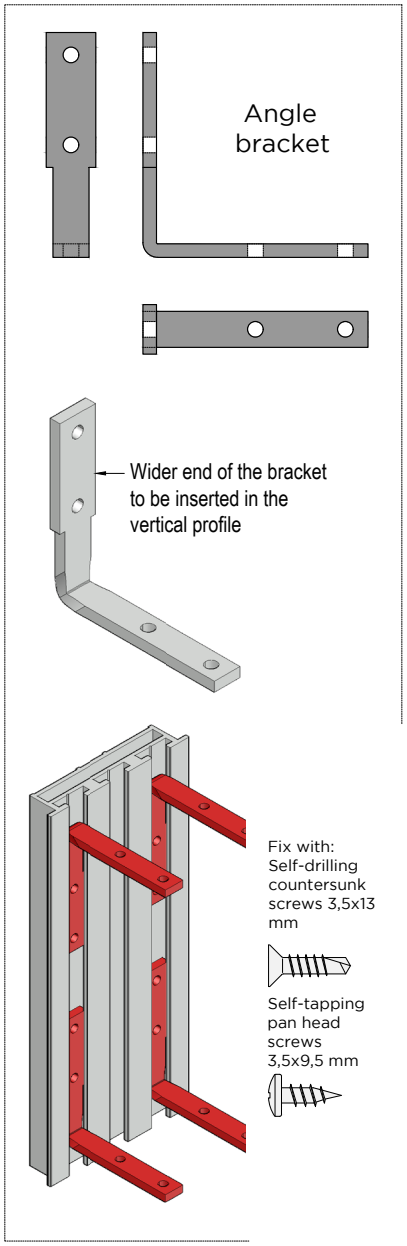

Wall starting profile

- Cut to measure the wall starting profile
- Attach on the back side 19 mm white adhesive tape for sound insulation
- **Insert the metal brackets to connect with the horizontal track (see detail)**
- Fix the base profile to the wall with screws and plugs

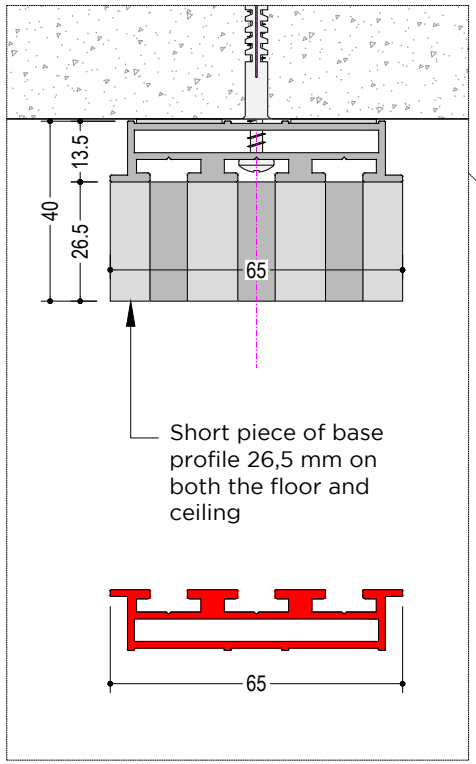

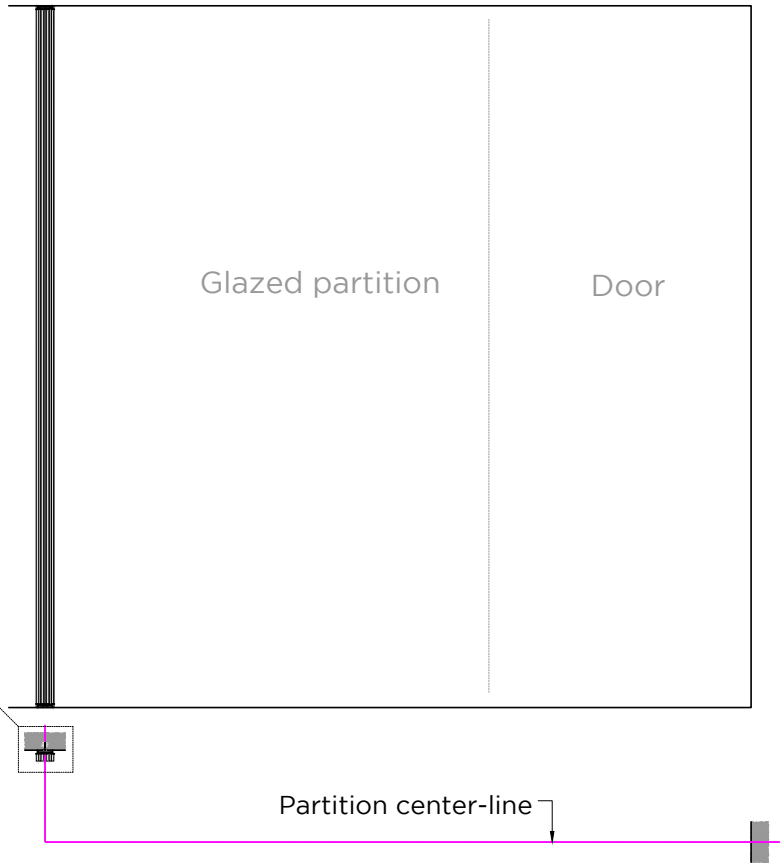

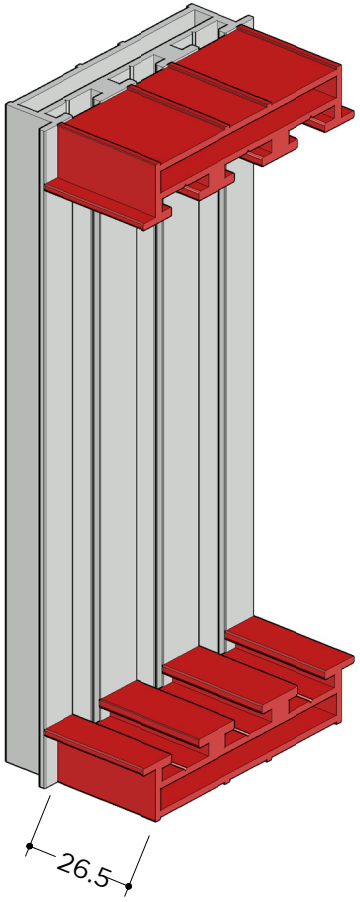

Spacer for horizontal tracks

- Fix to both the floor and ceiling the supplied short pieces of base profile 26,5 mm long next to the wall starting profile

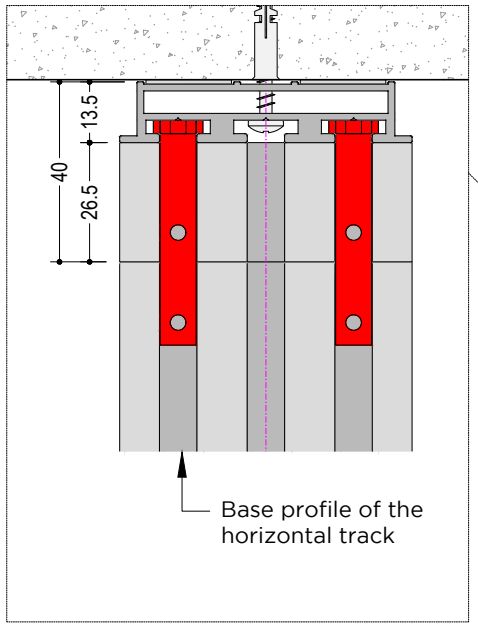

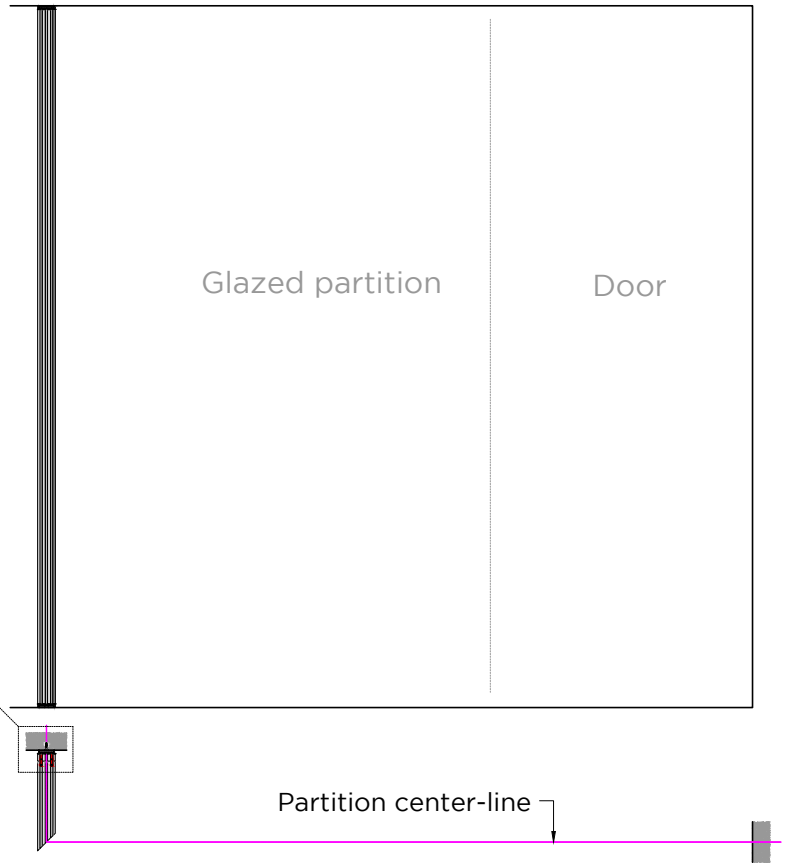

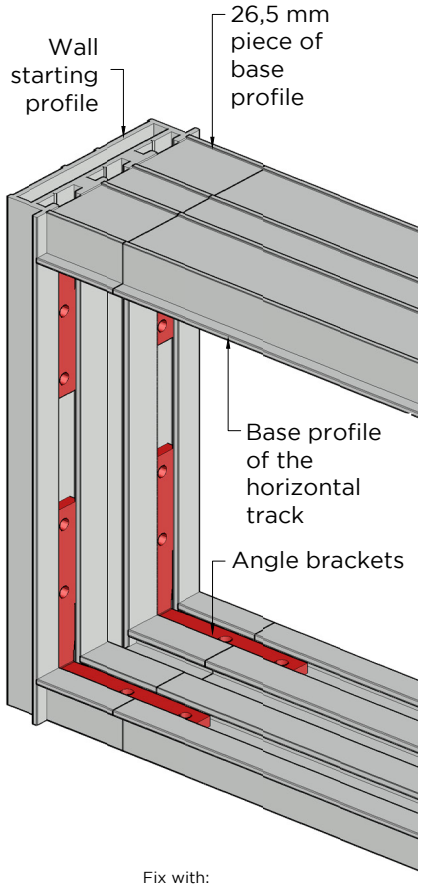

Horizontal tracks:

- Check on the main drawing if the horizontal tracks were supplied at exact dimension or longer, to be cut on site
- Cut to size, if necessary, based on site dimensions
- Attach on the back side 19 mm white adhesive tape
- Fix the base profiles with screws and plugs
- Connect to the wall starting profile with the previously inserted angle brackets

Fix with:
Self-drilling countersunk screws 3,5x13 mm

Self-tapping pan head screws 3,5x9,5 mm

Solid partition:

- In case that the solid and glazed modules are comprised on the same partition length, the horizontal tracks are split by the full height glazed-to-solid junction

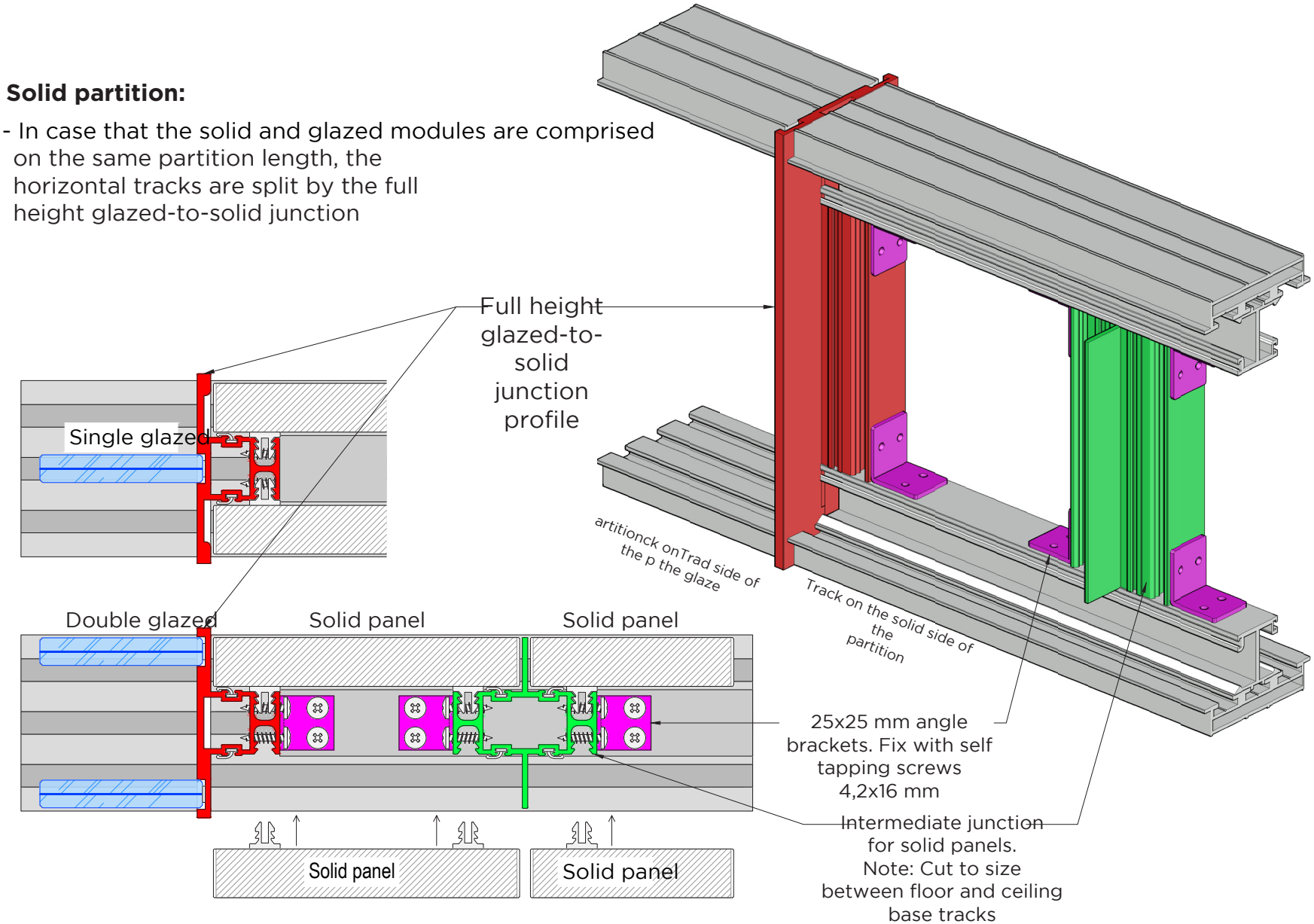

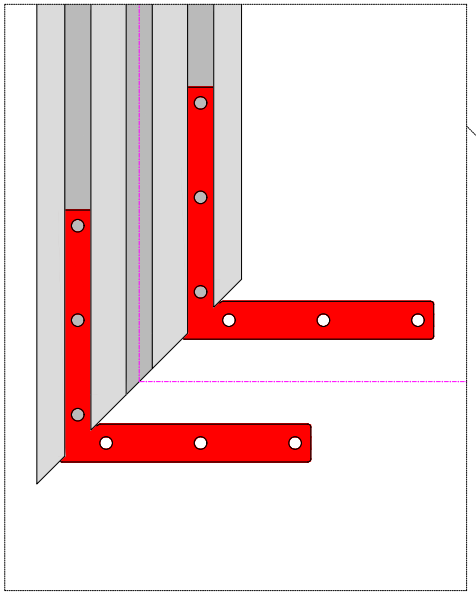

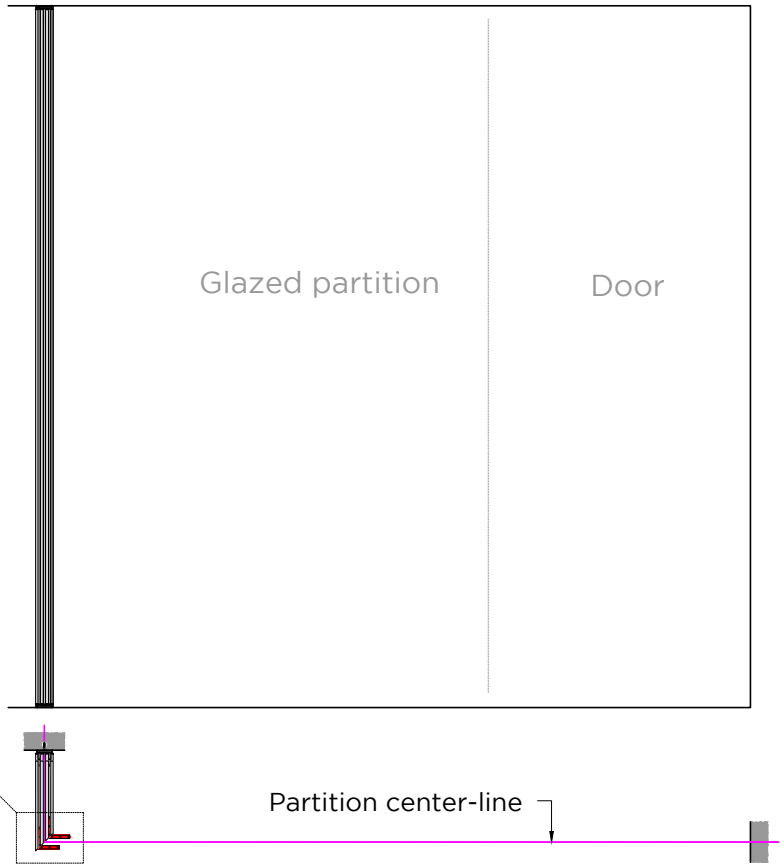

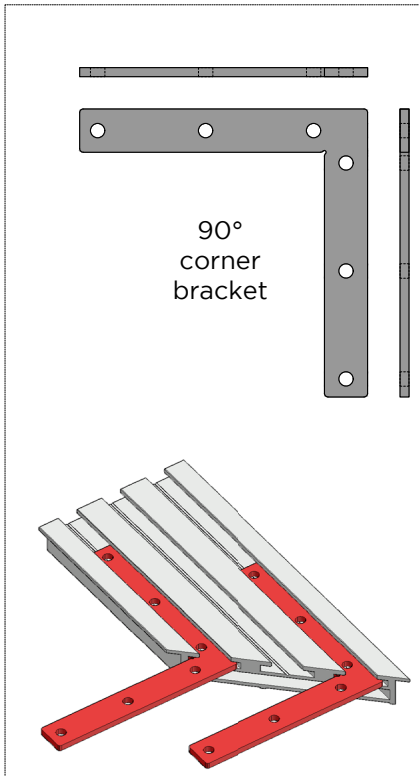

Fix with:
Self-drilling countersunk screws 3,5x13 mm

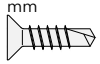

Self-tapping pan head screws 3,5x9,5 mm

90° corner junction

- Inserrt the 90° corner brackets in the base profile of the horizontal tracks, floor and ceiling
- Install the horizontal tracks on the other side and secure with screws

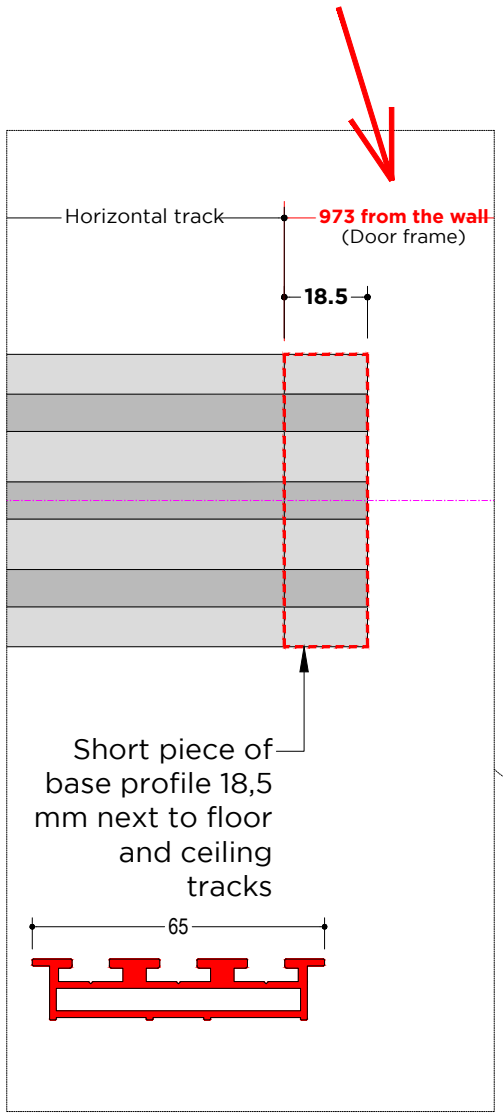

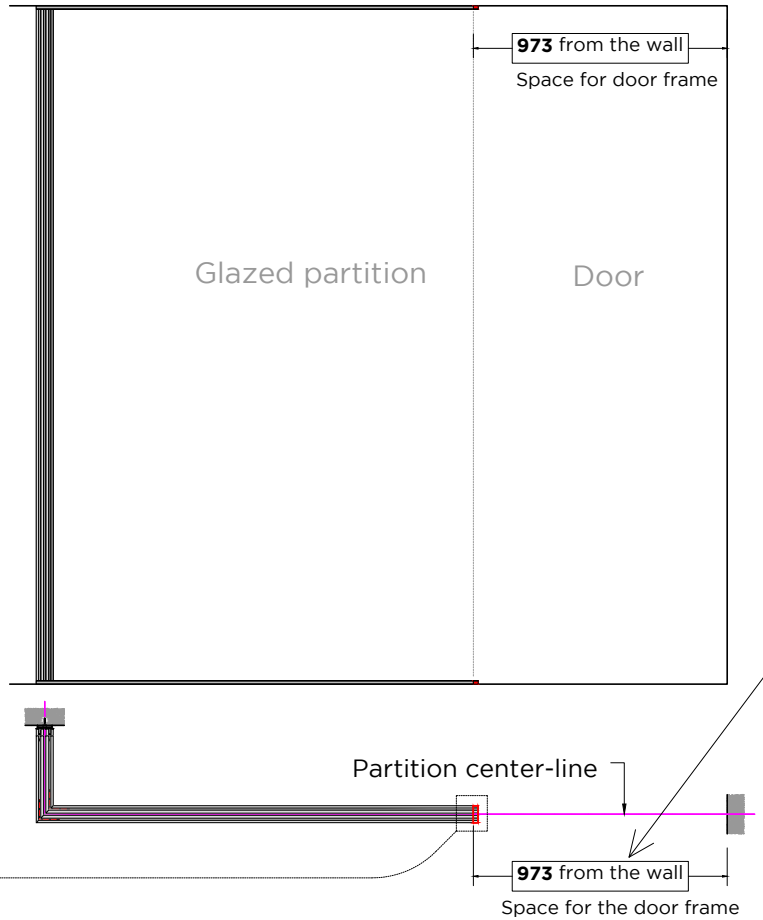

NOTE:
Necessary dimension +/- 3 mm to install the door frame with one side against the wall. In case of doors in the middle of a partition, the standard door width is **963** mm (double check the dimension on the plan)

Horizontal tracks:

- Install the horizontal tracks to complete the corner junction
- Position next to the base profile the short pieces of base profile 18,5 mm (spacers for door frame installation)
- Attach on the back side 19 mm white adhesive tape
- Fix the base profile to the floor and ceiling with screws and plugs

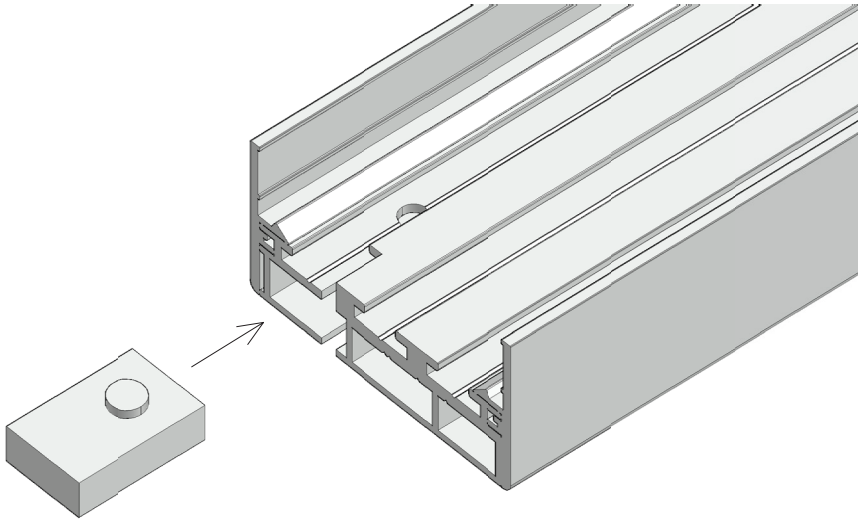

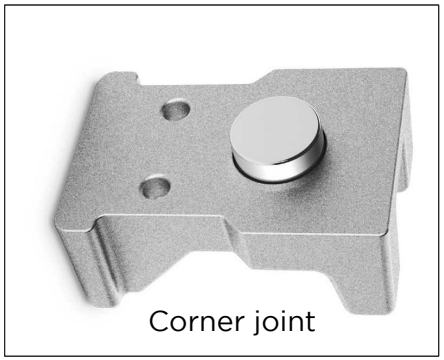

Door frame header for **full-height doors**

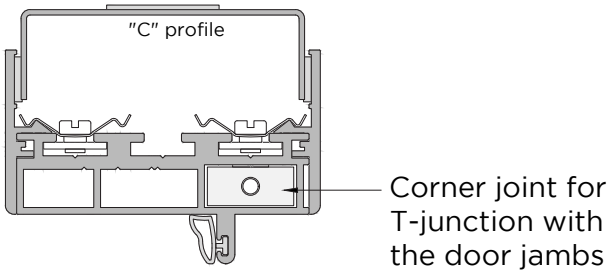

Door frame headers for **doors with overpanel**

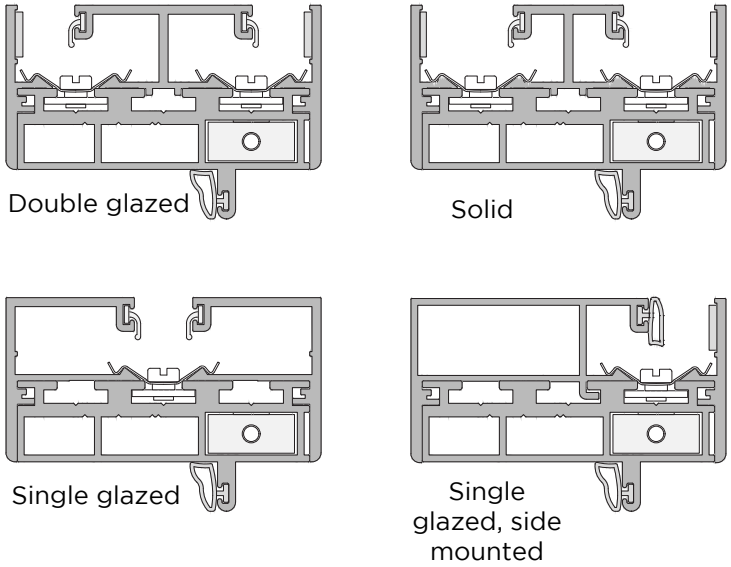

Preparation of the door frame header:

- Insert the aluminium joint on both sides of the header profile (see photos)
- Install the clip-in profiles, depending on the chosen configuration:
  full-height door or door with overpanel, see drawing of the possible options

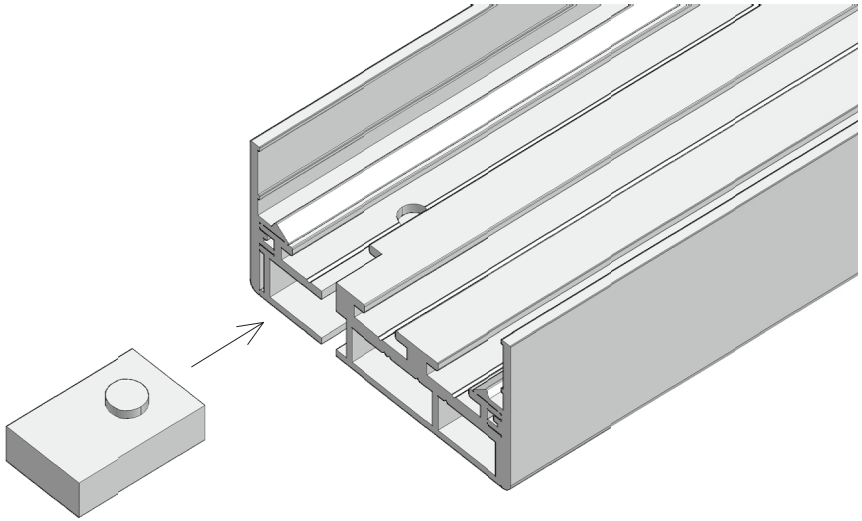

Door frame header for **full-height doors**

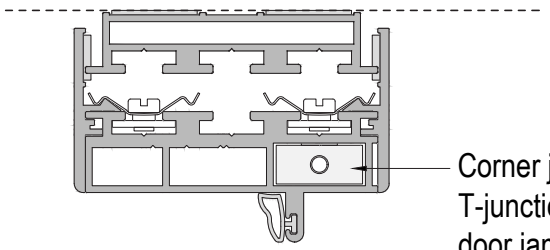

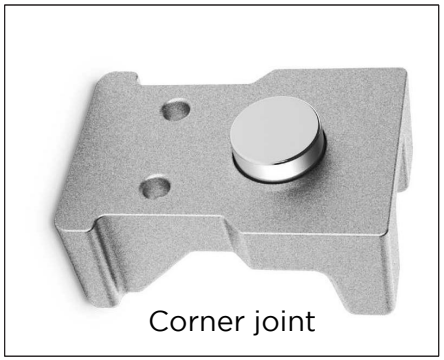

Door frame headers for **doors with overpanel**

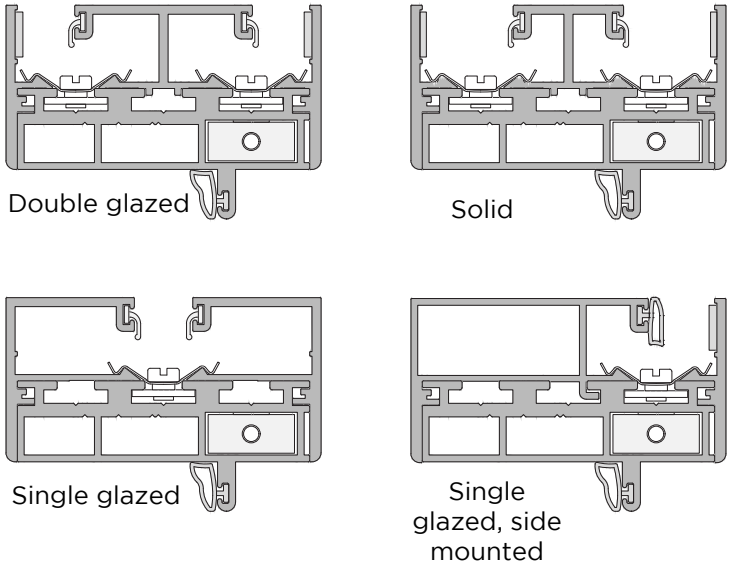

Preparation of the door frame header:

- Insert the aluminium joint on both sides of the header profile (see photos)
- Install the clip-in profiles, depending on the chosen configuration:
  full-height door or door with overpanel, see drawing of the possible options

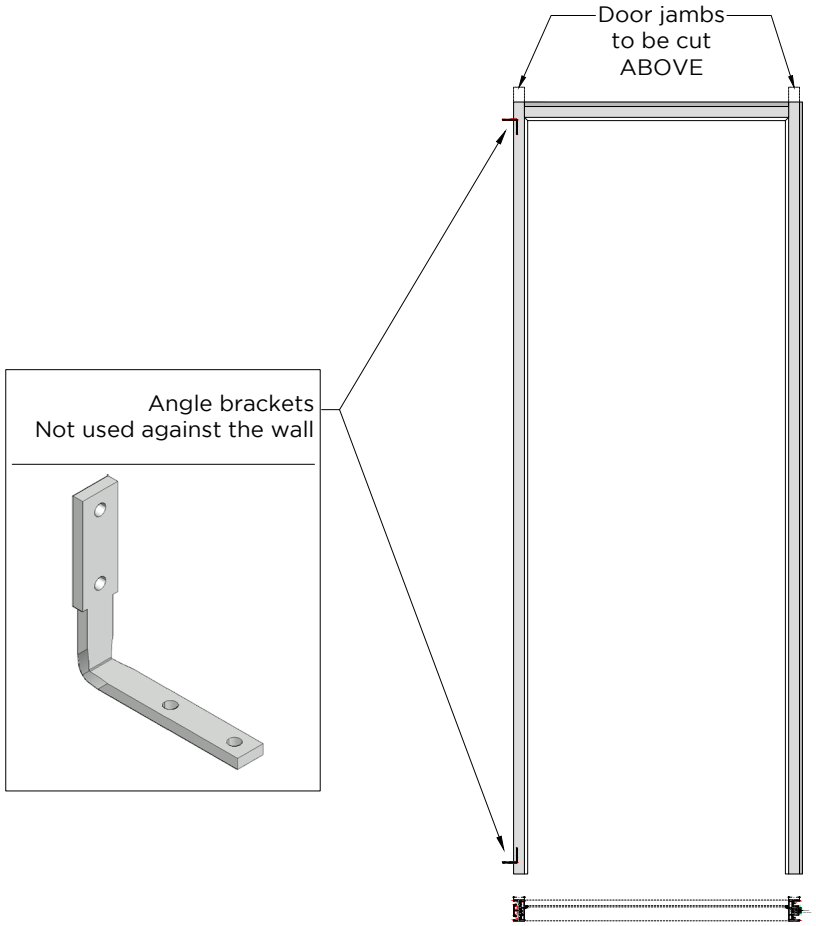

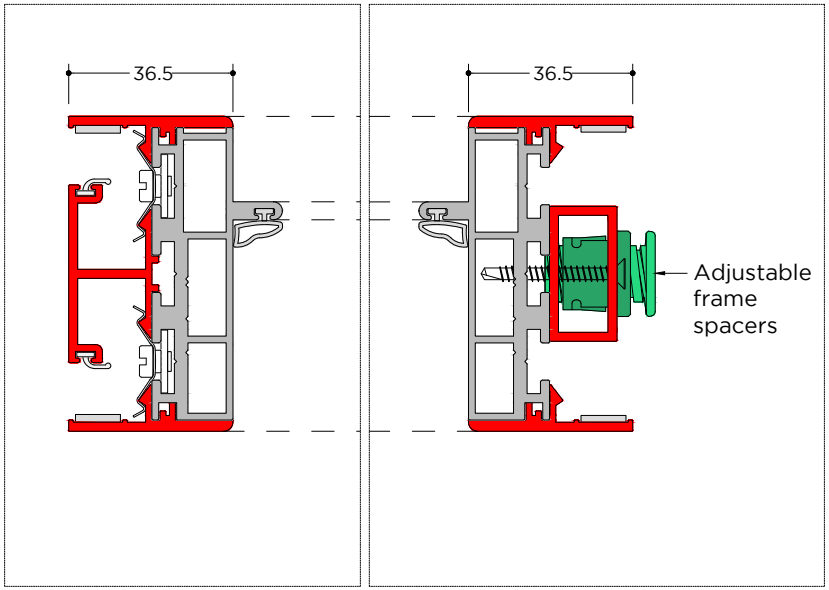

Door frame jamb
on the partition side

Door frame jamb
on the wall side

Preparation of door jambs:

- Cut to size the jambs, according to the actual height of the ceiling, CUT ONLY ON THE UPPER SIDE unless specifically asked
- Join the frame jambs and header with M4 socket head screws
- NOTE: the clip-in profiles are different in case the jamb is against the wall or the partition continues next to the door (see drawing)
- Insert in the jamb on the partition side the angle brackets for junction with the horizontal tracks

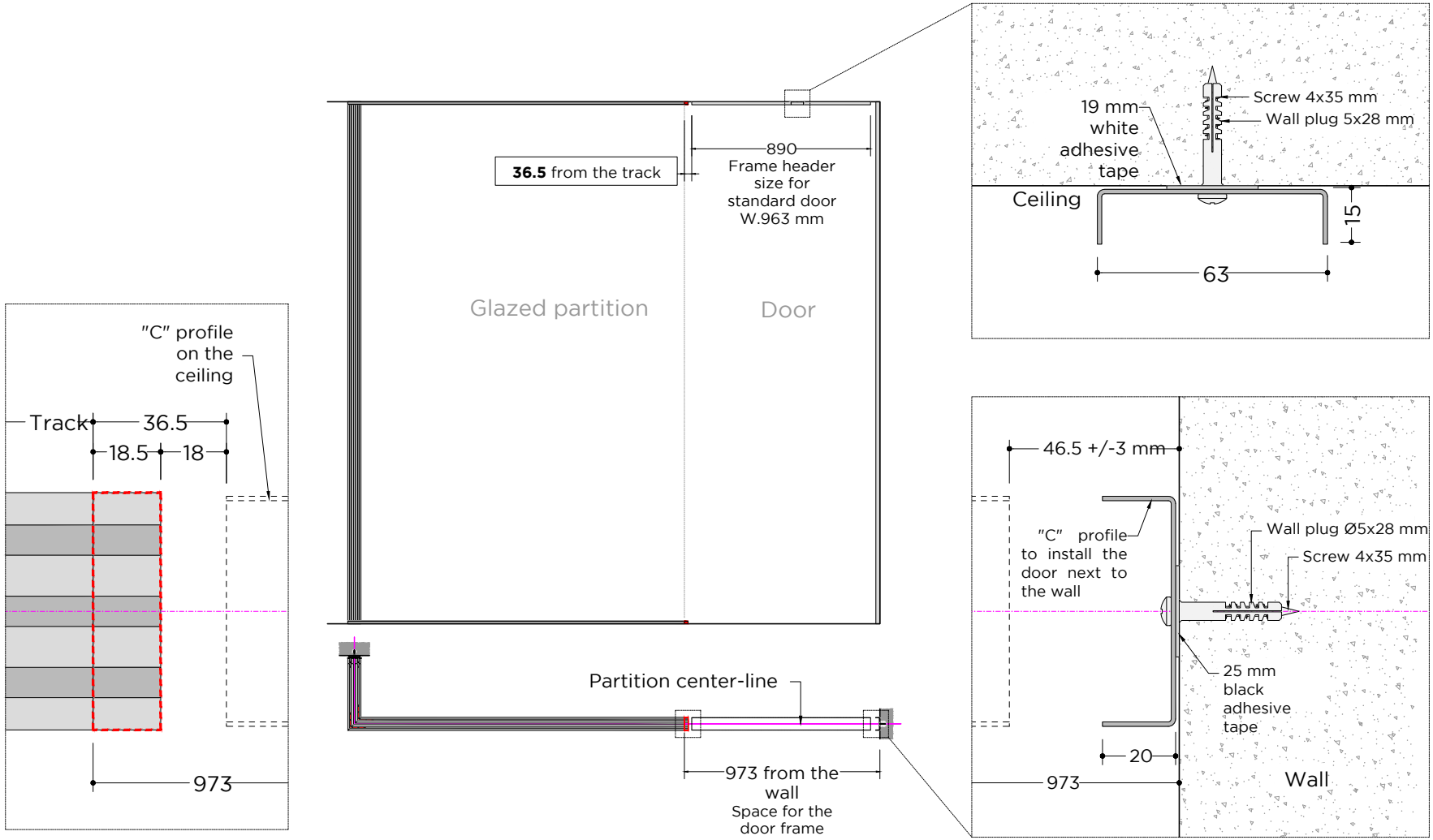

- Cut to size the "C" profile to be installed on the wall next to the door
- Install on the ceiling the "C" profile of the door frame header.
- **Note the dimension on the drawing**
- Fix both profiles with screws and plugs Ø5x28 mm

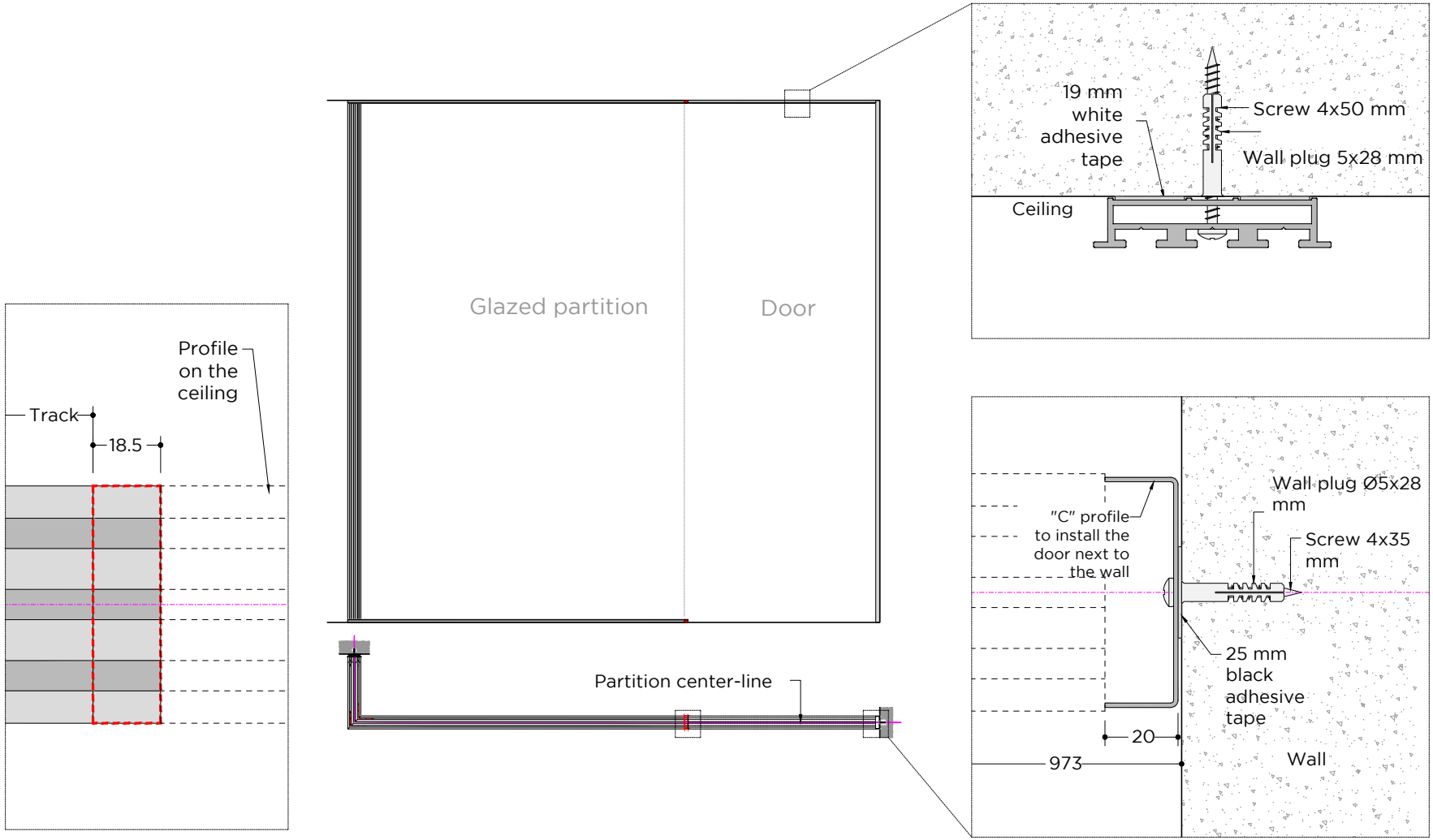

- Cut to size the "C" profile to be installed on the wall next to the door
- Install on the ceiling the base profile of the door frame header
- Fix both profiles with screws and plugs

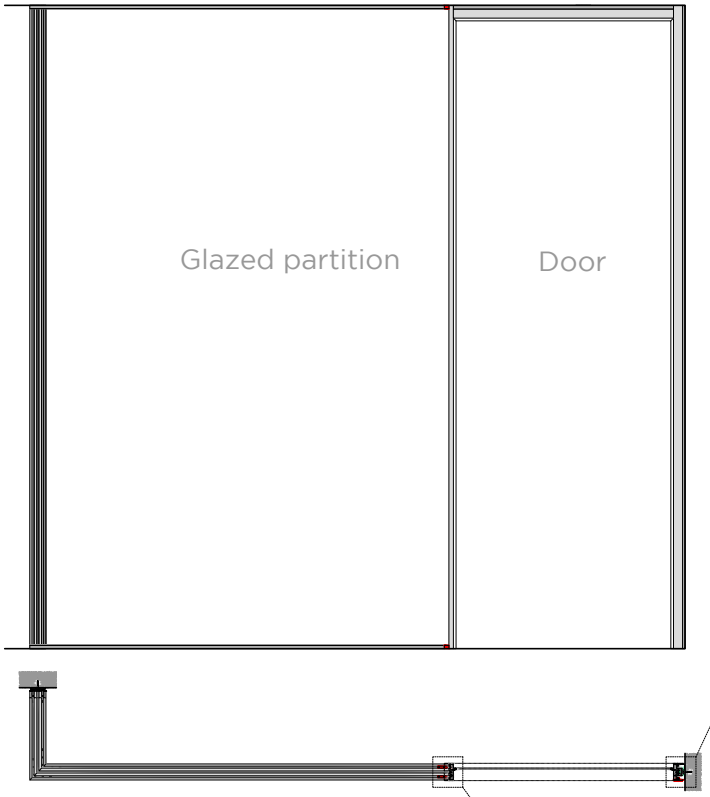

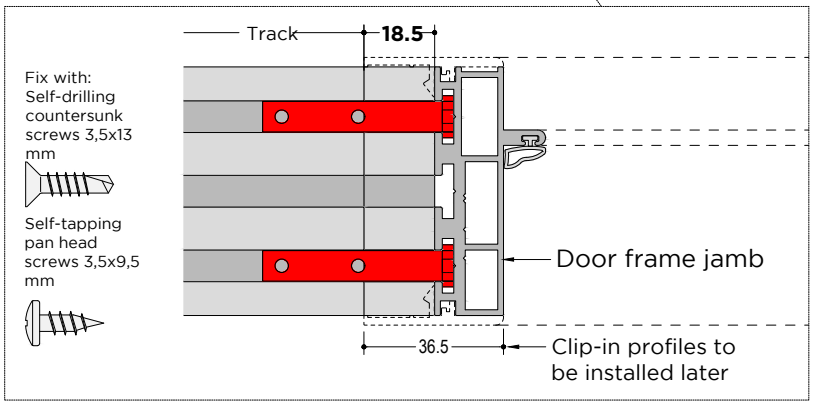

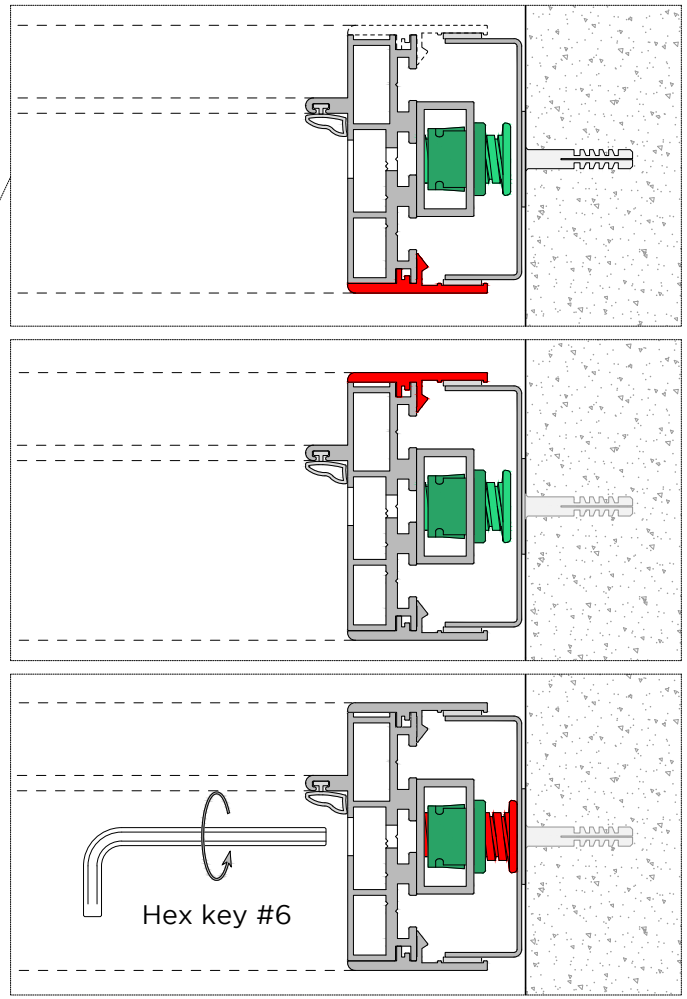

- Position the door frame
- Screw in the frame to the horizontal tracks using the angle brackets
- Install the clip-in profiles on the wall-side jamb and header
- Adjust the frame spacers with an hex key

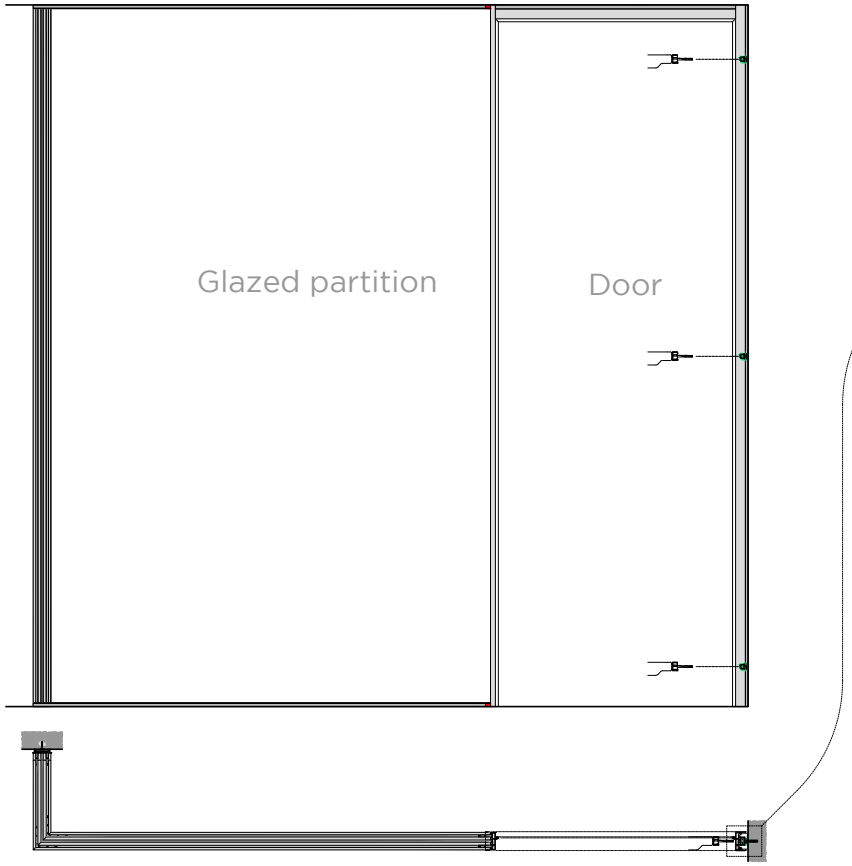

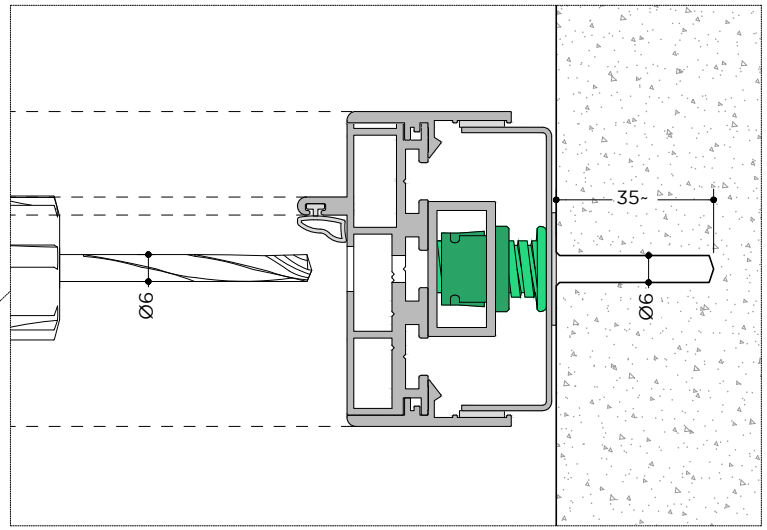

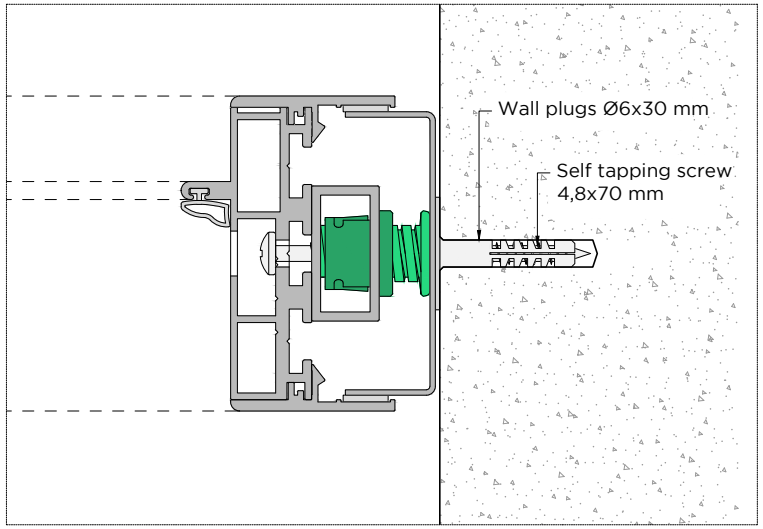

- Drill through the adjustable frame spacers to the side wall, Ø6 x depth about 35mm
- Fix the door frame with wall plugs Ø6x30 mm and long screws 4.8x70 mm

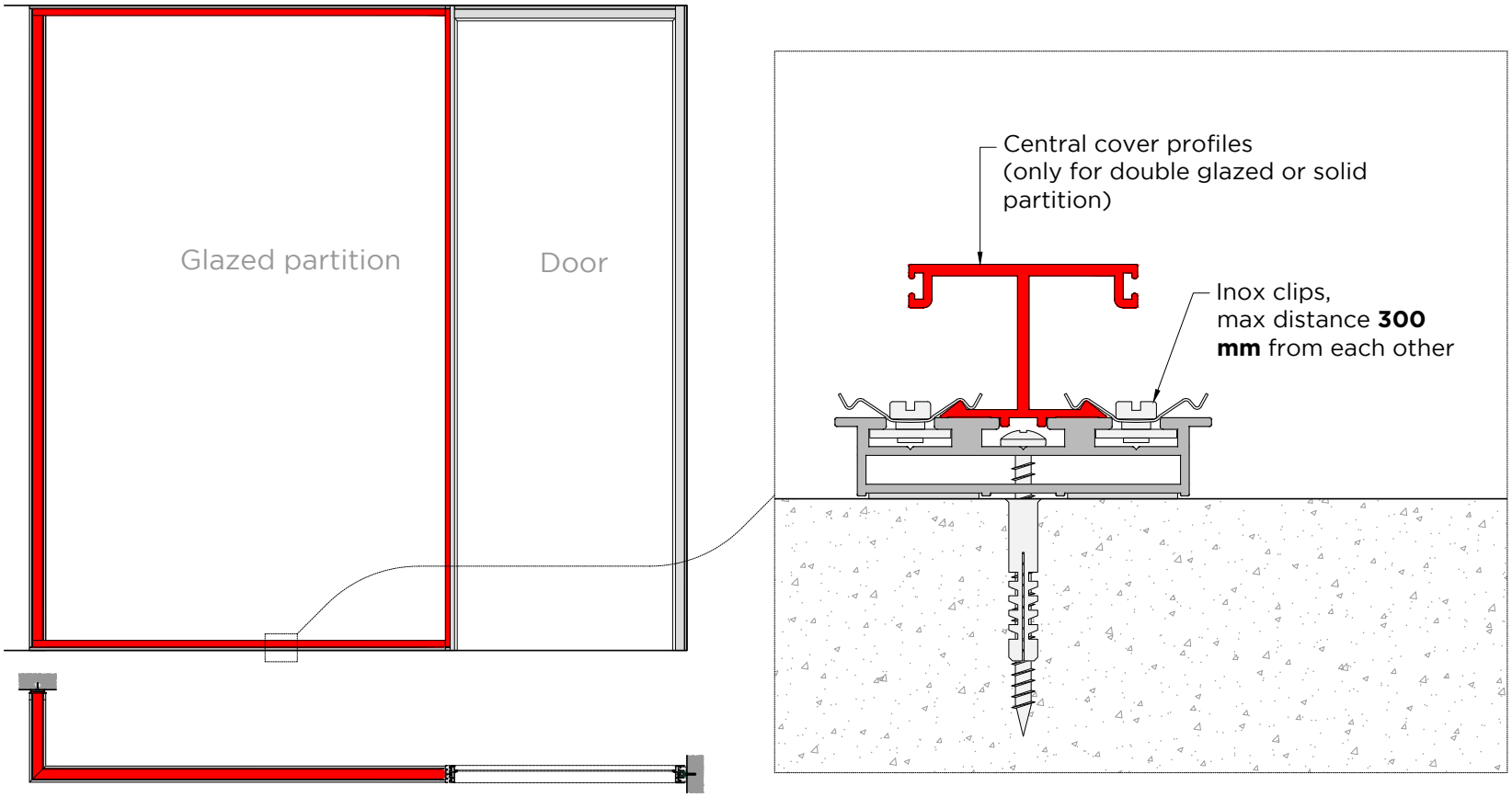

- Only for double glazed or solid partitions, cut to size and instlall the central aluminium profile on wall starting profiles, horizontal tracks, door frame jambs
- Lock in position with the inox clips, see detail on the next page

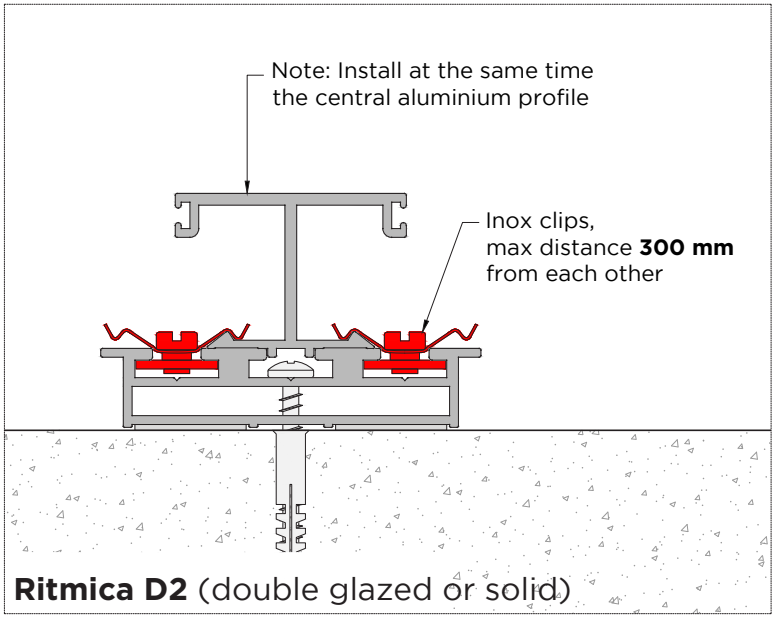

Ritmica D2 (double glazed or solid)

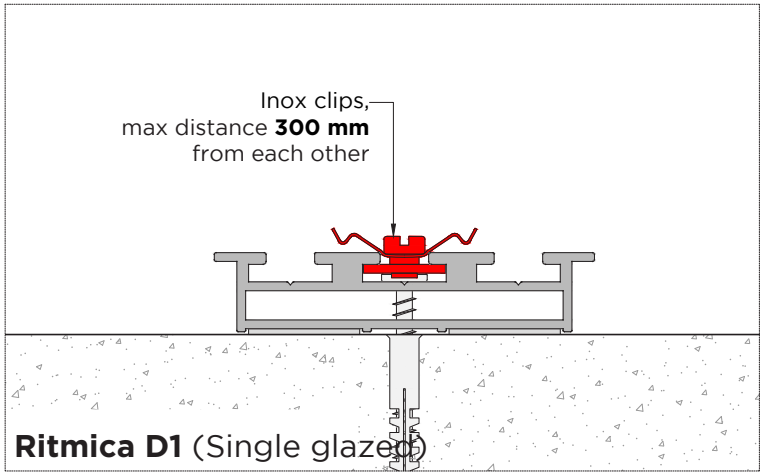

Ritmica D1 (Single glazed)

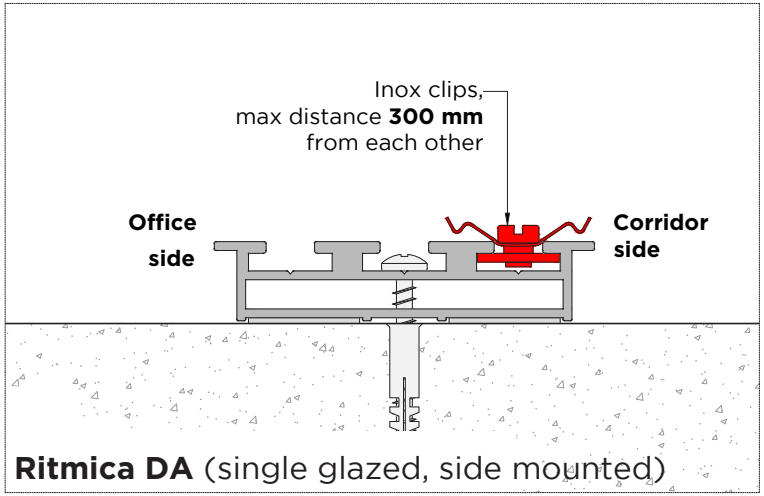

Ritmica DA (single glazed, side mounted)

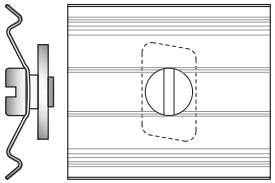

- Insert the inox clip in the base profile grooves on wall starting profiles, horizontal tracks, door frame jambs
- Maximum distance between each inox clip **300** mm
- Clips to be positioned according to the type of partition, see drawings
  Ritmica D2 Double glazed or solid partition
  Ritmica D1 Single glazed partition
  Ritmica DA Single glazed partition with side mounted glass
- Only for Ritmica D2, cut to size and install at the same time the central aluminium profiles

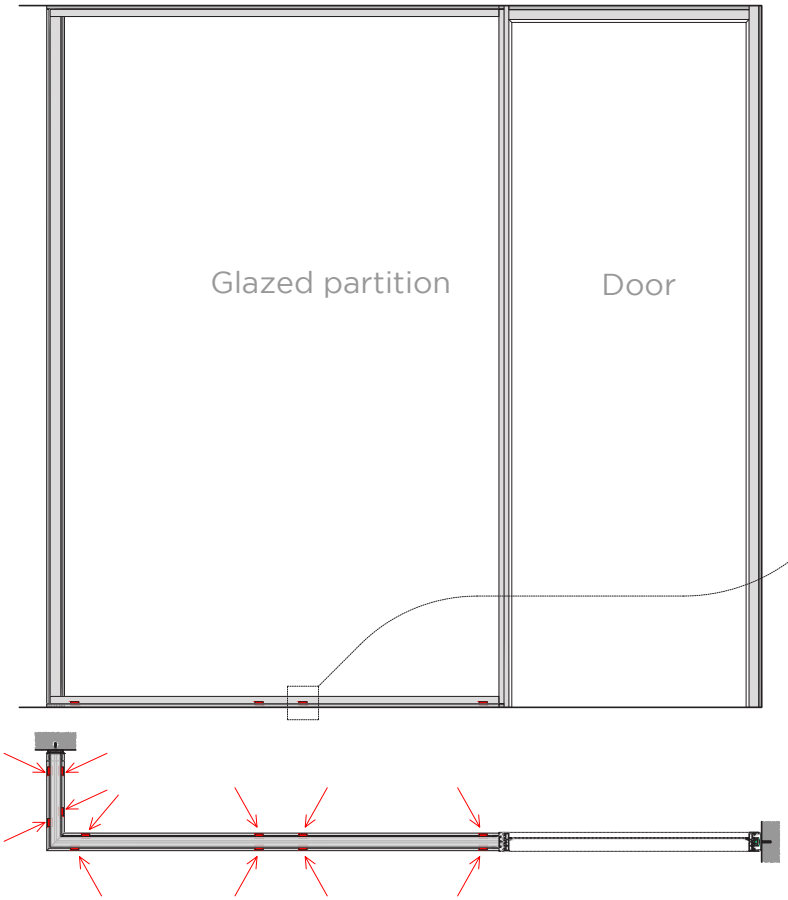

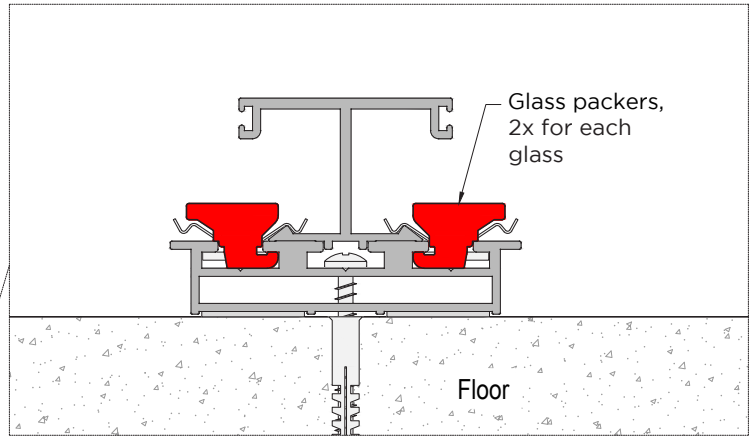

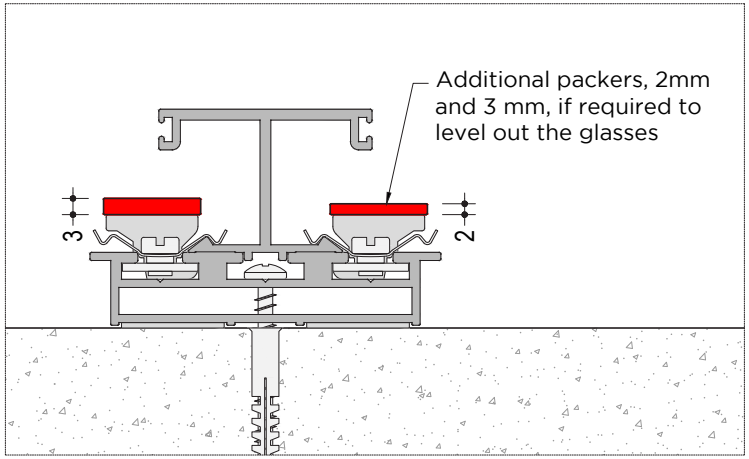

- Insert the glass packers in the floor tracks
- The packers go in the same groove(s) asof the inox clips
- Use additional 2 mm and 3 mm packers, if necessary to level out the glasses, in case the floor is not even

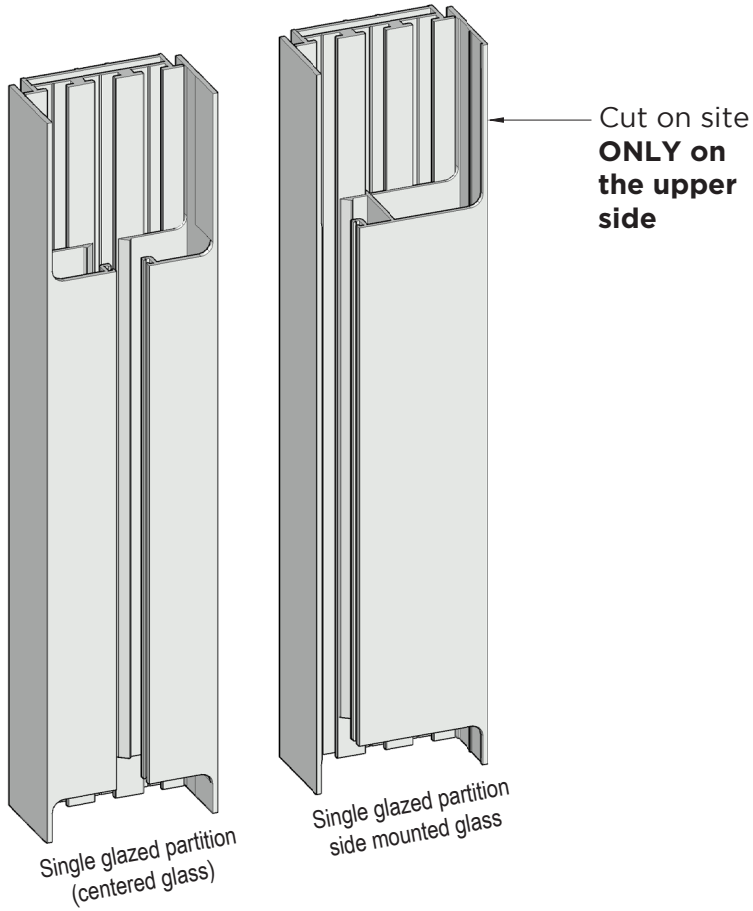

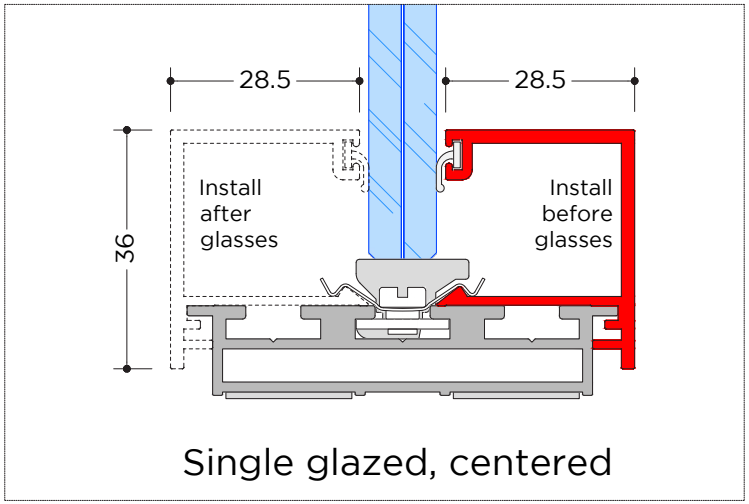

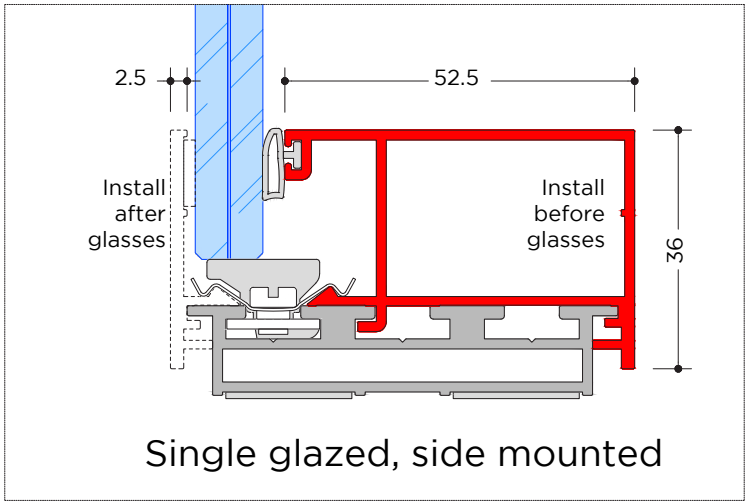

ONLY FOR SINGLE GLAZED PARTITIONS:

- Install the clip-in profiles on one side of the partition**;** the profiles are different, depending on the chosen configuration
- The clip-in profiles of wall starting profiles and door frame jambsare milled as per drawing,

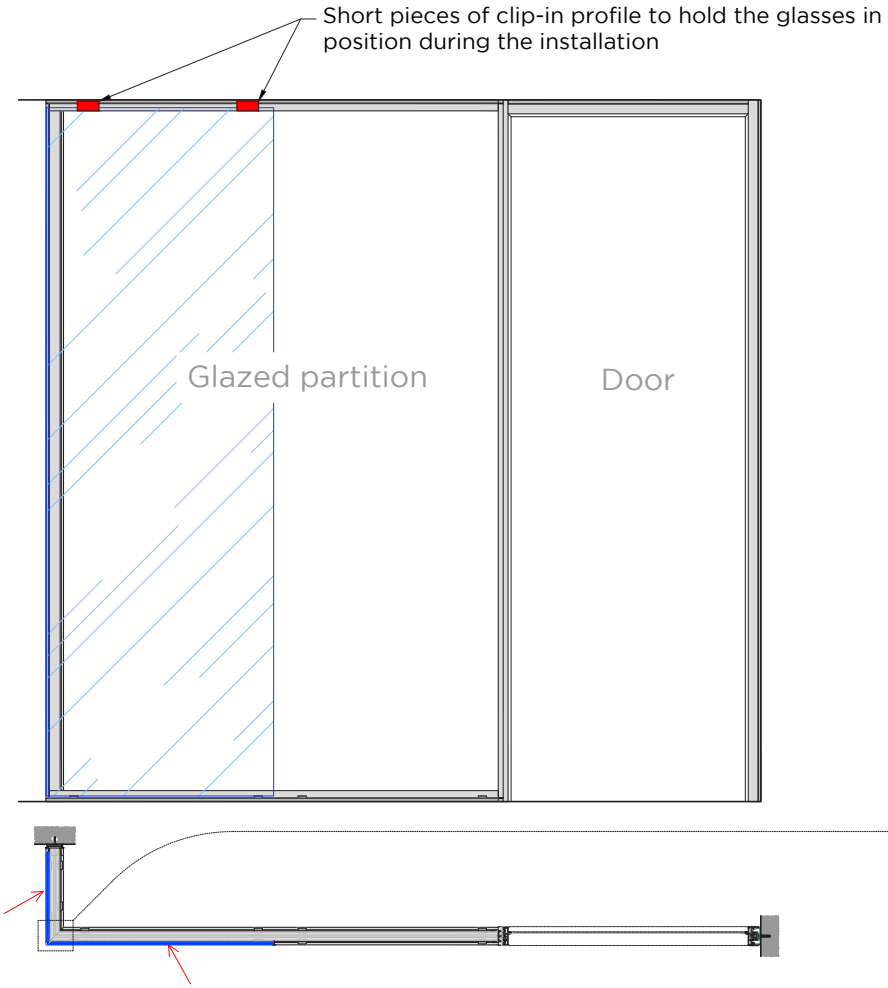

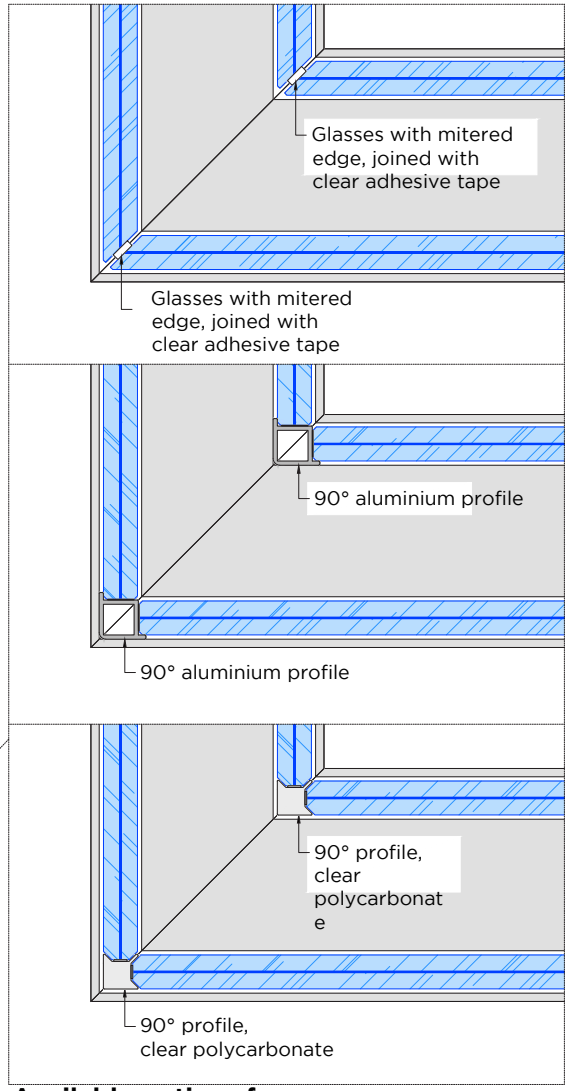

Available options for 90° junctions

- Start to position the glass panels
- If necessary, level out the glasses with thin packers to make them perfectly plumb
- If the project comprises 90° junctions, begin with glasses next to these corner junctions
- Use the supplied short pieces of clip-in profile to hold the glasses until the complete installation of all the glass panels

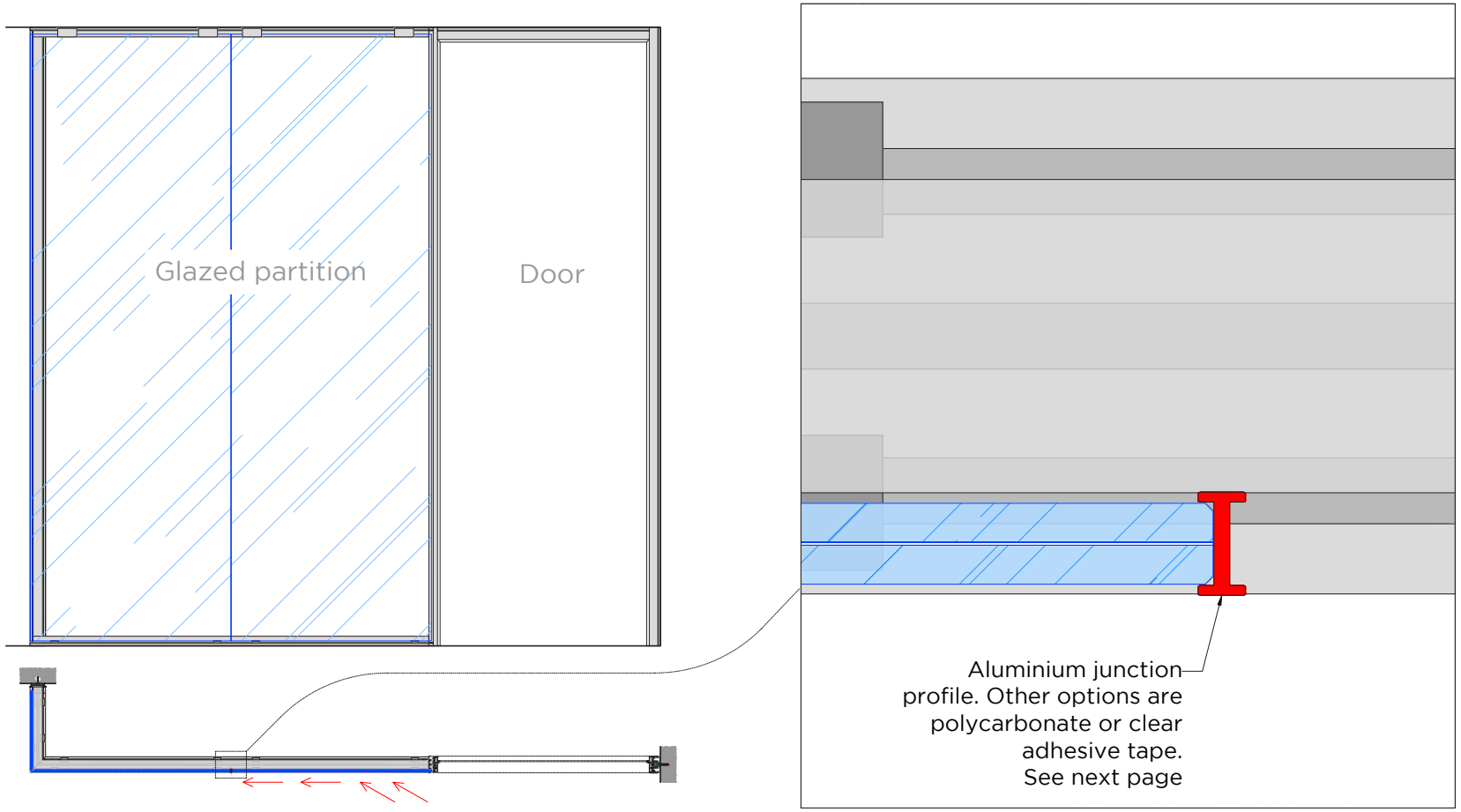

- For partitions composed of two or more glazed panels, cut to size and glue to the edge of each glass the junction profile (or lay the adhesive tape)
- Position all the glasses on the same side of the partition and glue them to the junction profiles with clear silicone or clear adhesive tape. See drawings
- For double glazed partitions, CLEAN CAREFULLY THE INTERNAL SIDE of the glasses before continuing to install glasses on the other side

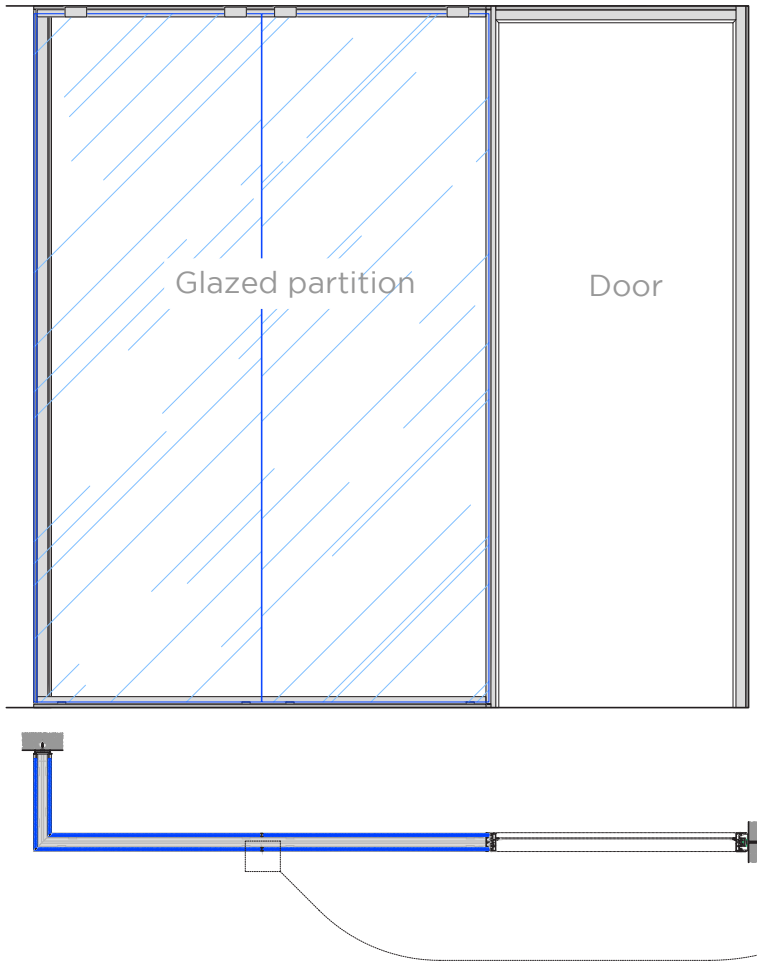

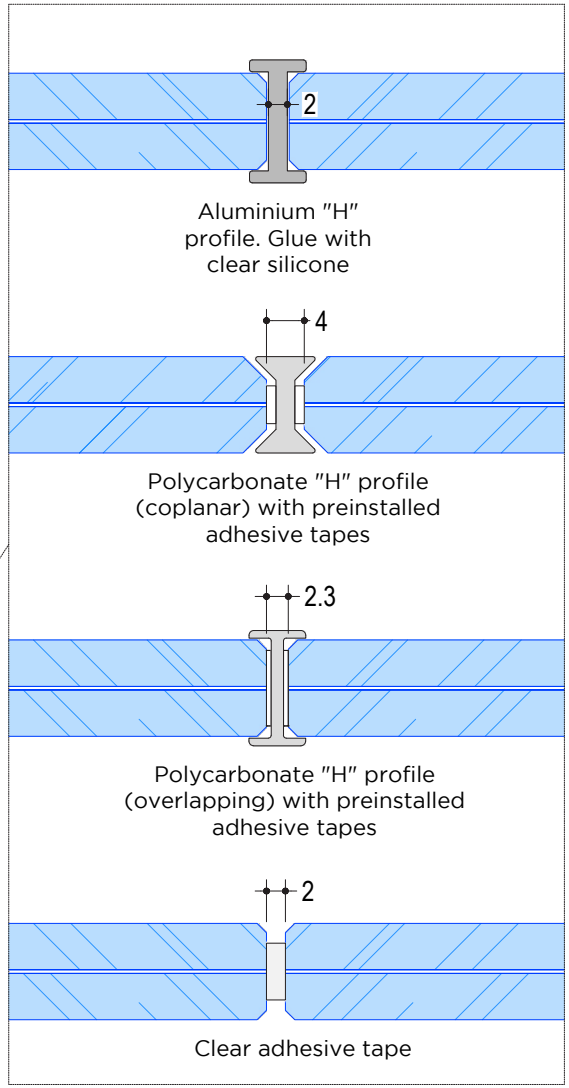

Available options for glazed junctions

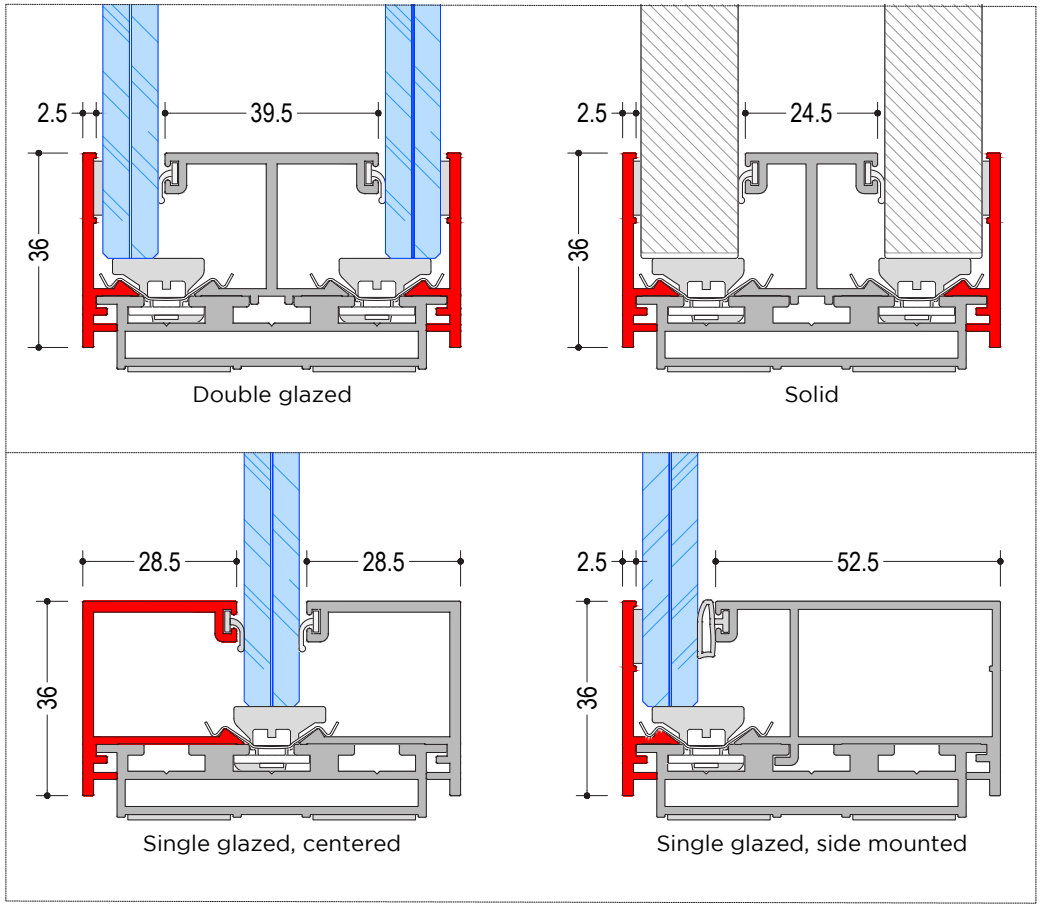

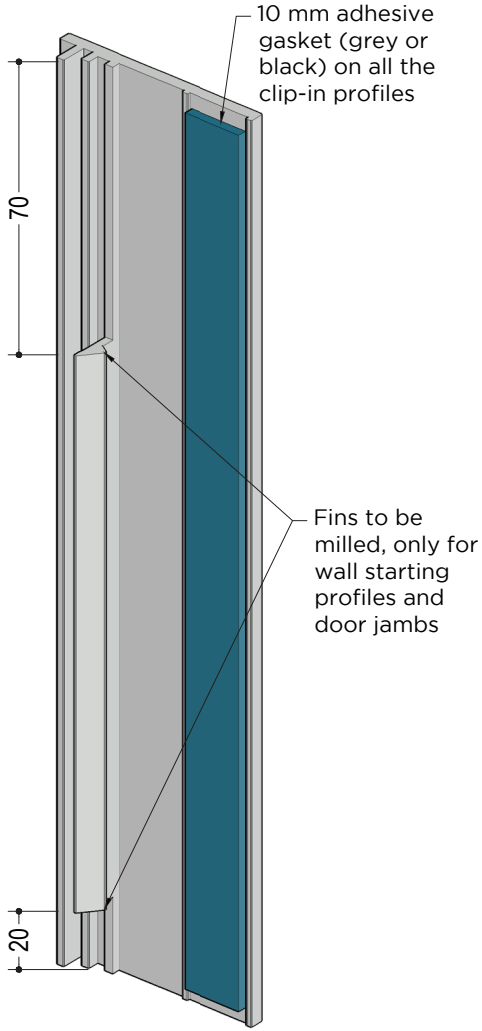

- Complete the installation of the clip-in profiles (remove the temporary short pieces) on wall starting profiles, horizontal tracks, door frame jambs
- Attach on site 10 mm adhesive gasket on all the 2,5 mm thick clip-in profiles (see drawing)
- The 2,5 mm thick profiles of wall starting profiles and door frame should be milled as shown; check if it was done in factory, otherwise do it on the spot.

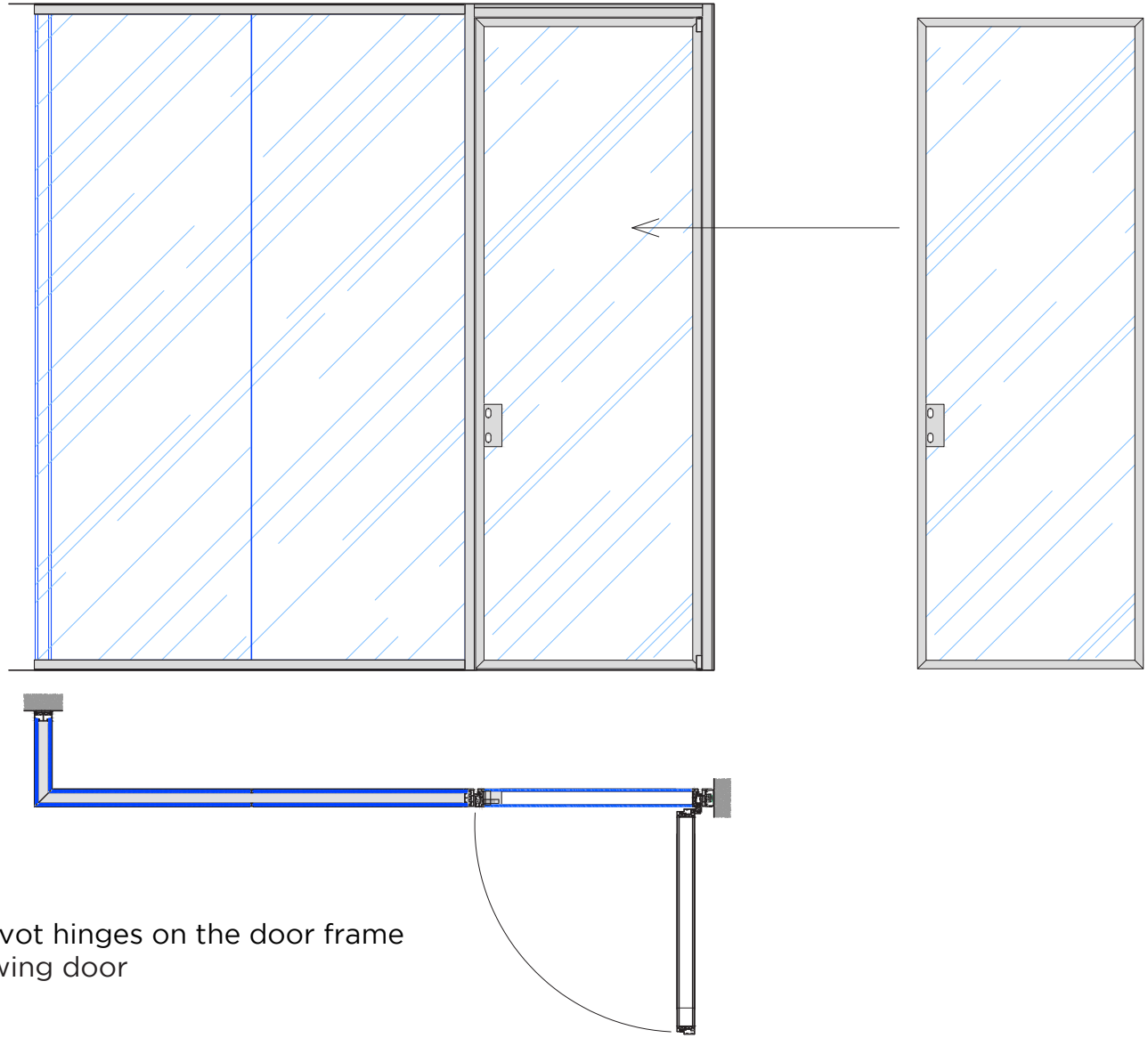

- Install the pivot hinges on the door frame
- Install the swing door

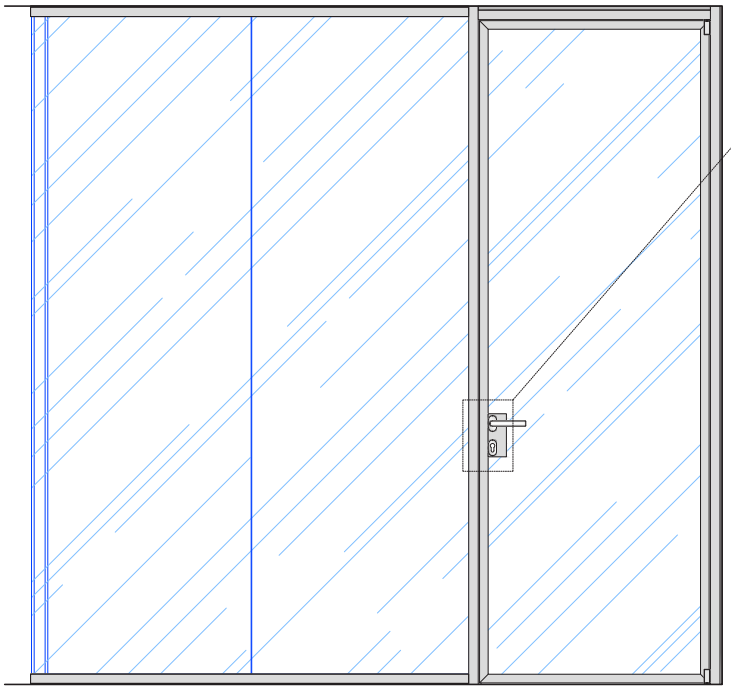

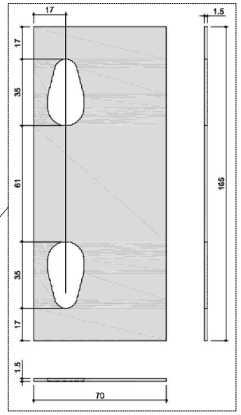

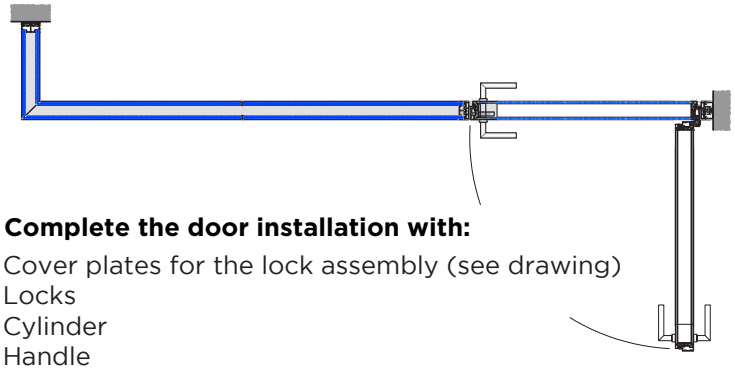

Complete the door installation with:

Cover plates for the lock assembly (see drawing)
Locks
Cylinder
Handle

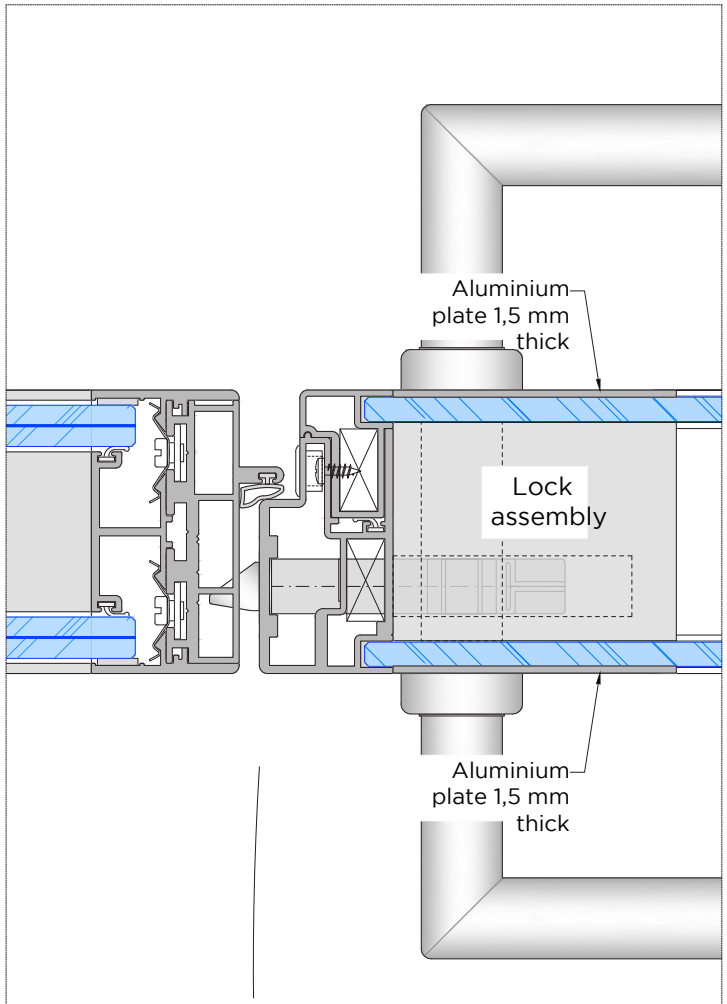

Ritmica door
Double glazed, flush with the partition

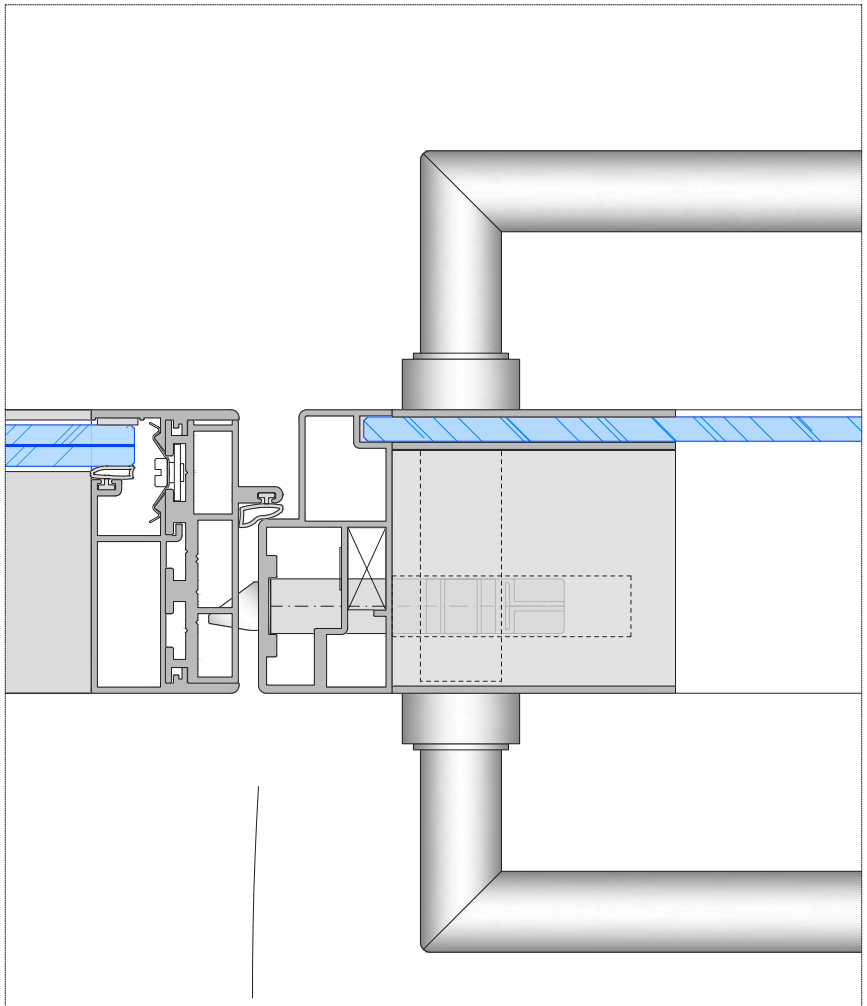

Ritmica door Single glazed, flush with the partition

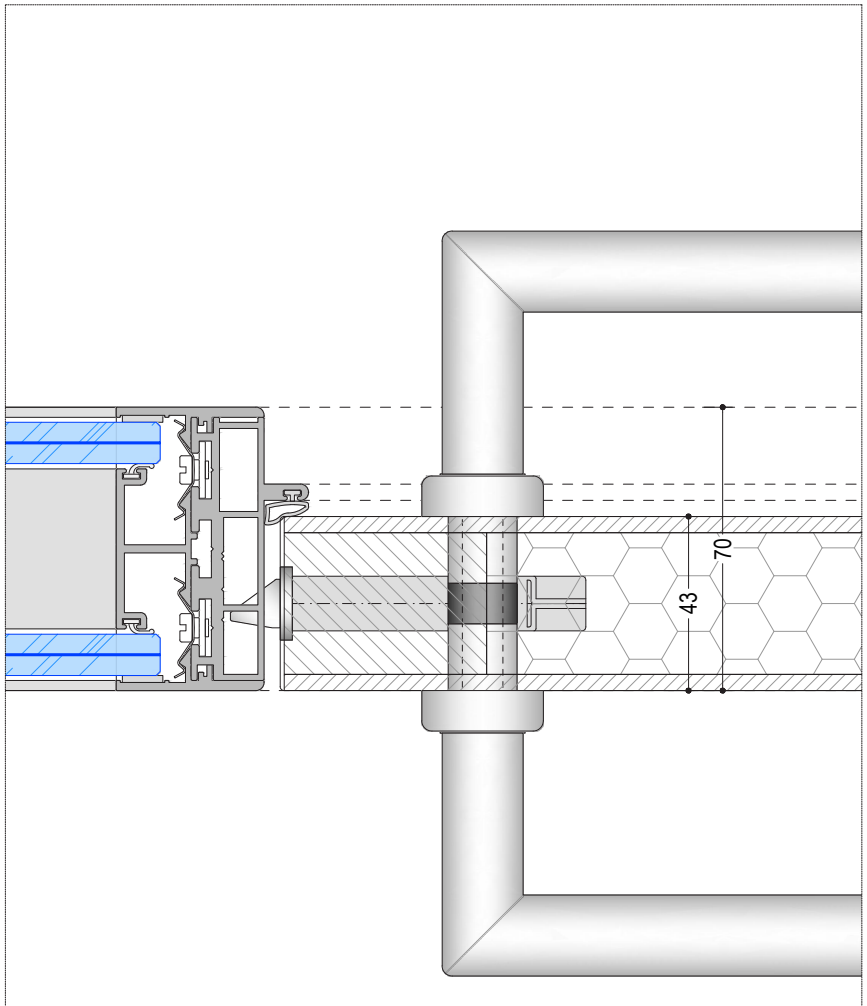

Other doors from the Etoile range:
solid, glazed, with thin frame, medium frame, large frame