UNICA
ASSEMBLY INSTRUCTIONS

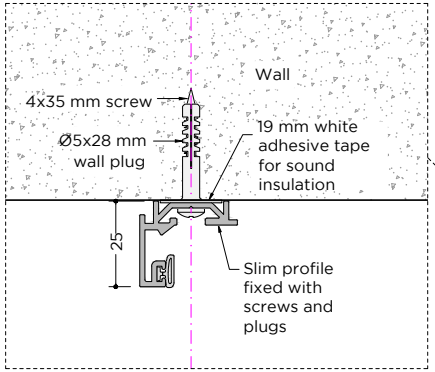

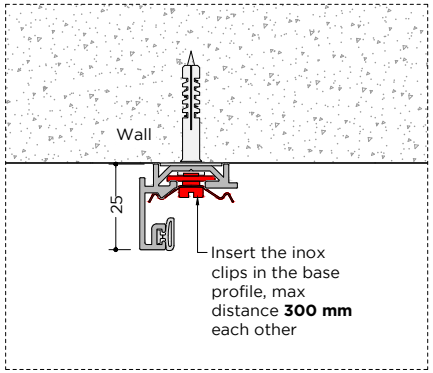

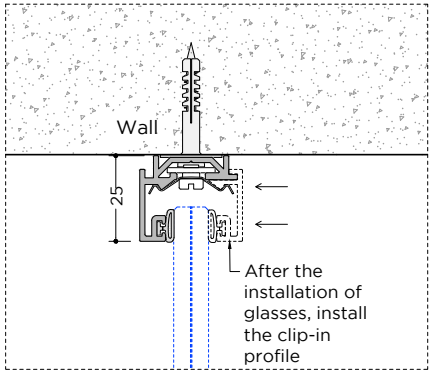

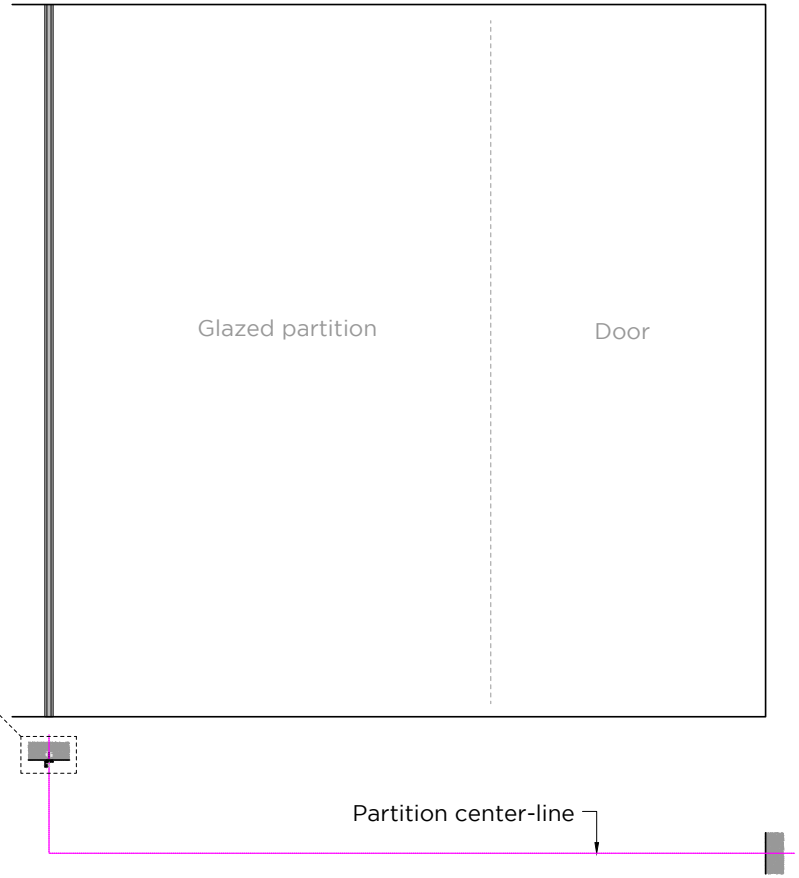

Wall starting profile, SLIM type (if included in the project)

- Cut to size the wall starting profile
- Attach on the back side 19 mm white adhesive tape for sound insulation
- **Insert the metal brackets to connect with the horizontal track (see detail)**
- Fix the profile to the wall with screws and plugs
- Insert the inox clips, **max pitch 300** mm

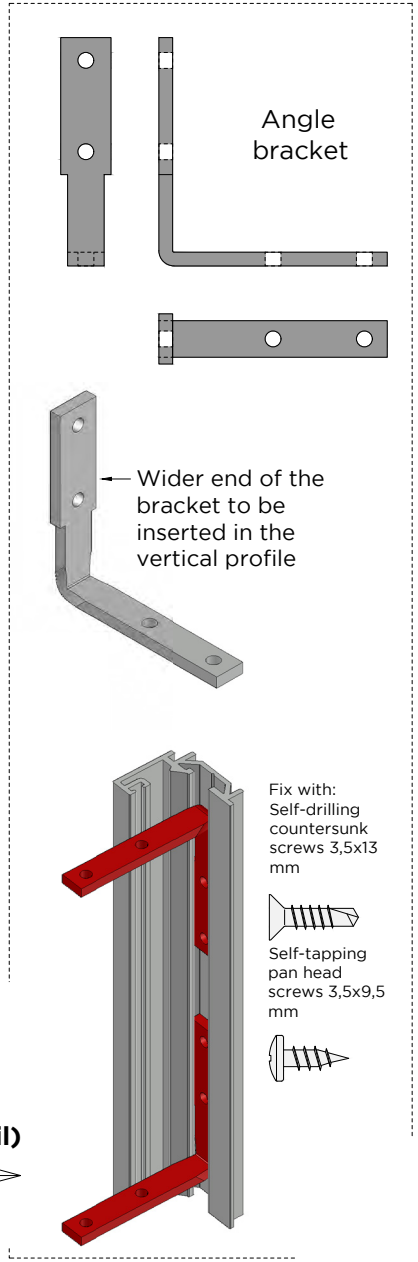

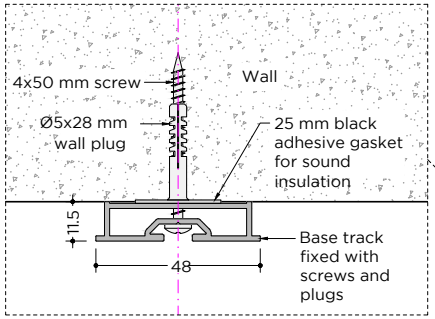

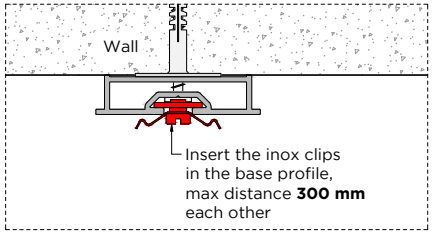

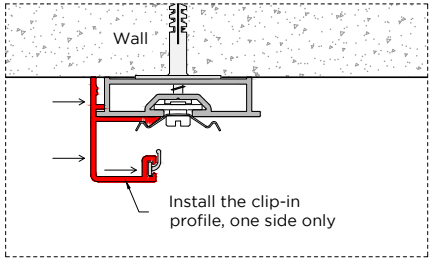

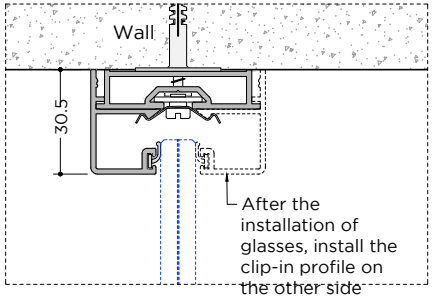

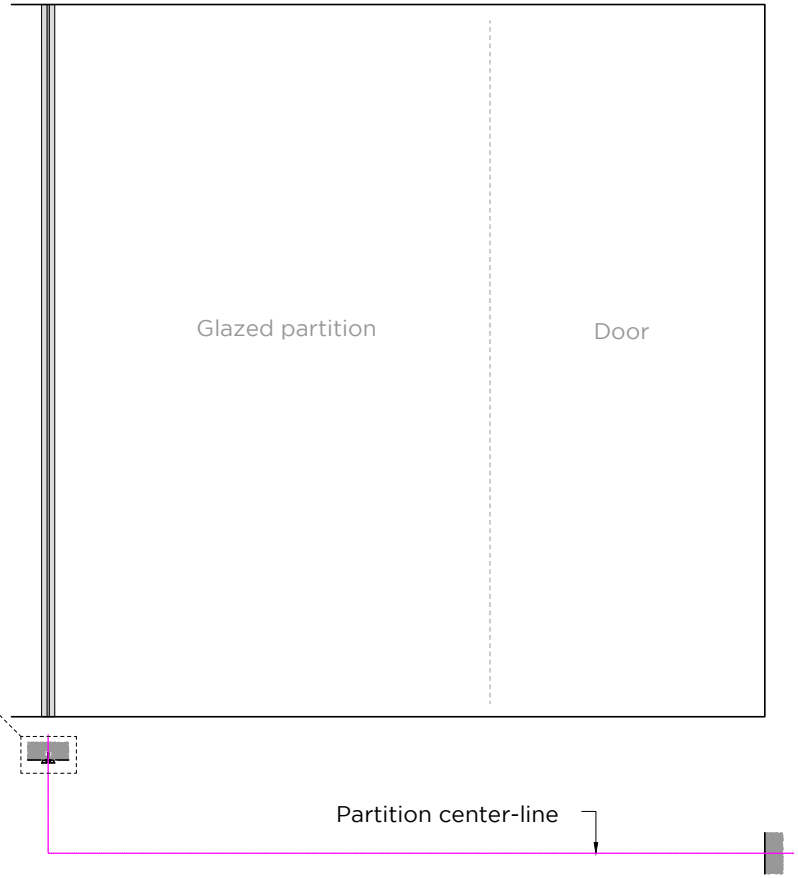

Wall starting profile, 51 mm type (if included in the project)

- Cut to size the wall starting profile
- Attach on the back side 25 mm black adhesive gasket for sound insulation
- **Insert the metal brackets to connect with the horizontal track (see detail)**
- Fix the base profile to the wall with screws and plugs
- Insert the inox clips, **max pitch 300** mm
- Install the clip-in profile, one side only

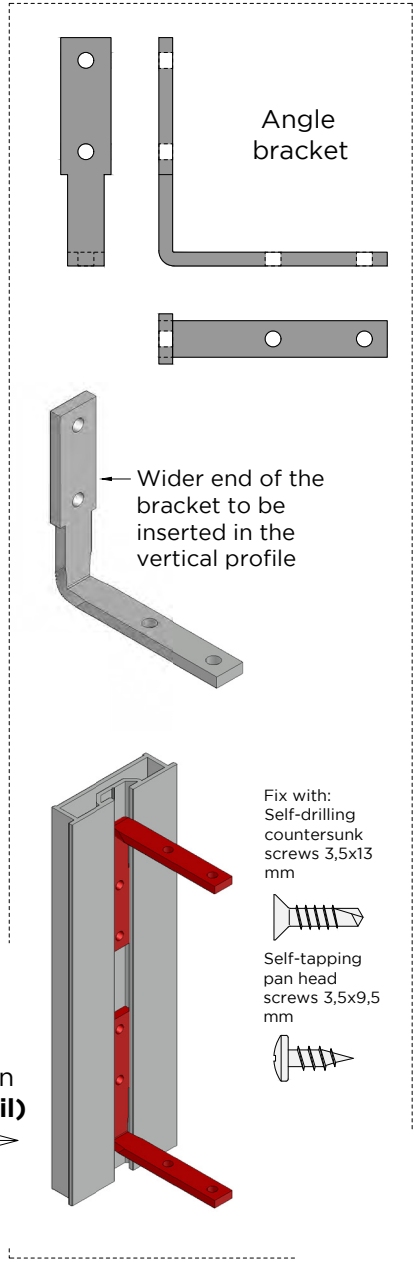

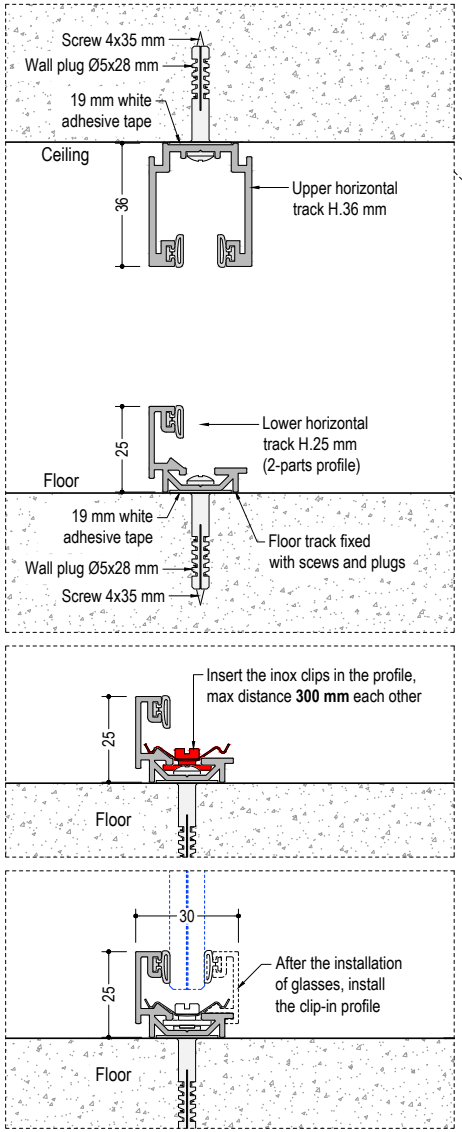

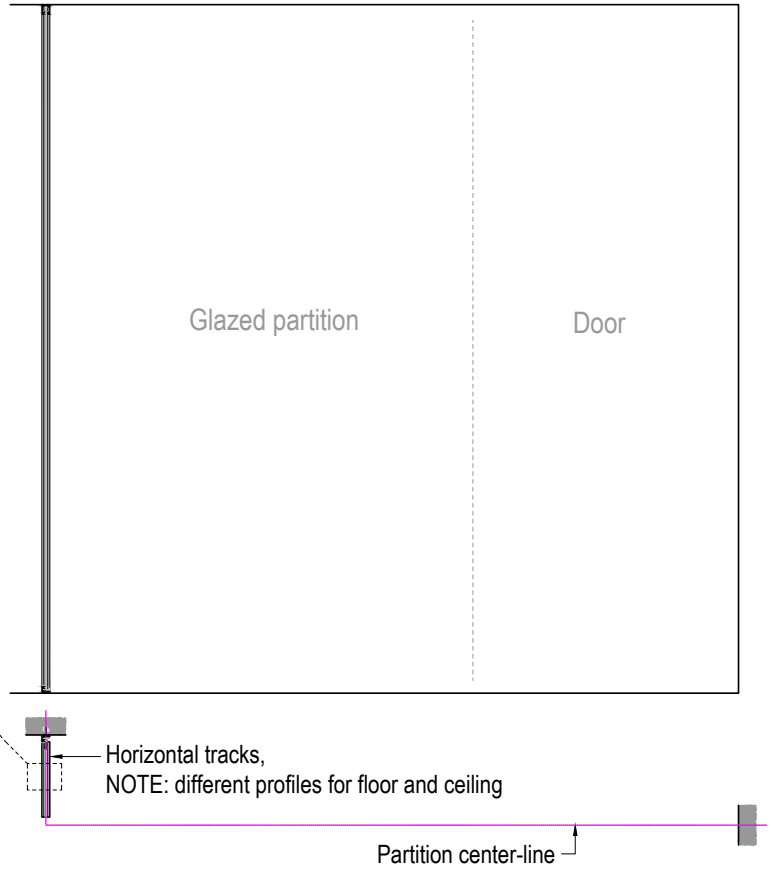

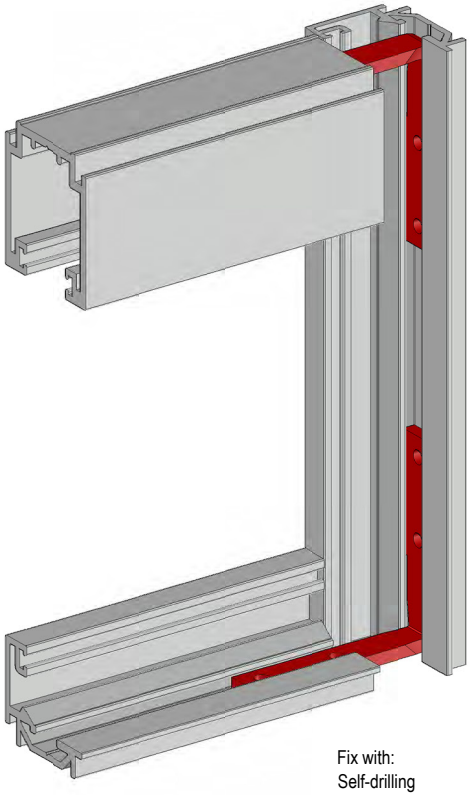

Fix with:
Self-drilling countersunk screws 3,5x13 mm

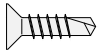

Self-tapping pan head screws 3,5x9,5 mm

Horizontal tracks:

- Check on the main drawing if the horizontal tracks were supplied at exact dimension or longer, to be cut on site
- Cut to size, if necessary, based on site dimensions
- Attach on the back side 19 mm white adhesive tape
- Fix the profiles with screws and plugs
- Connect to the wall starting profile with the previously inserted angle brackets
- Insert the inox clips, **max pitch 300** mm

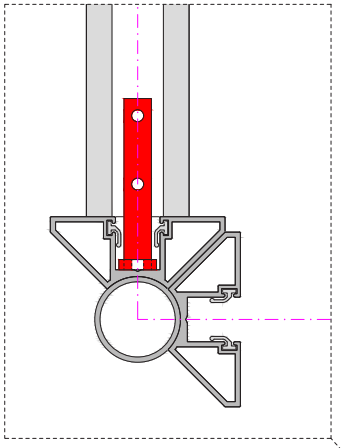

Fix with:
Self-drilling countersunk screws 3,5x13 mm

Self-tapping pan head screws 3,5x9,5 mm

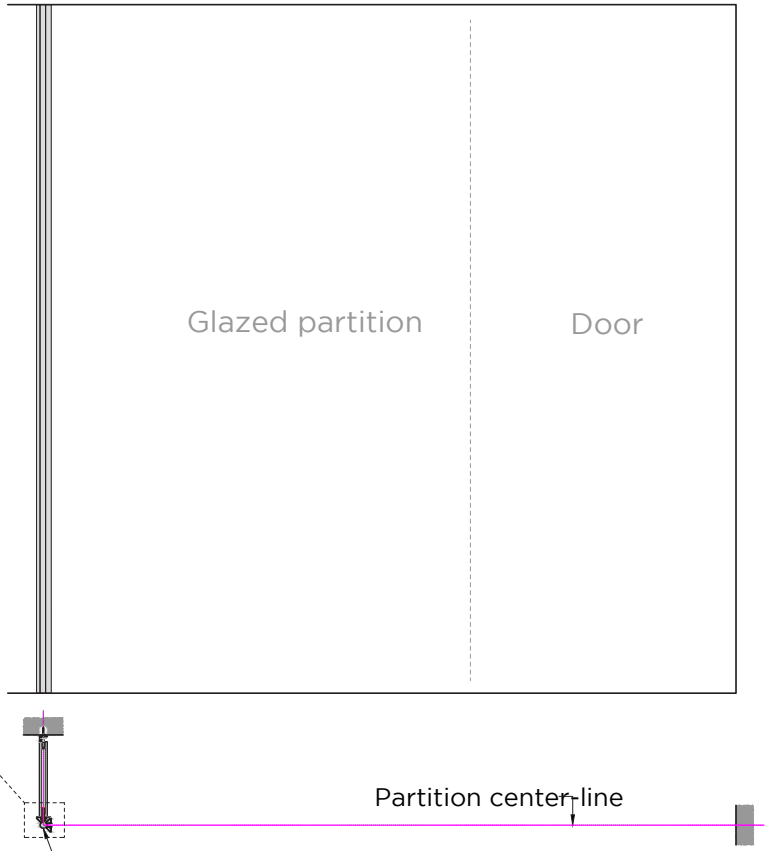

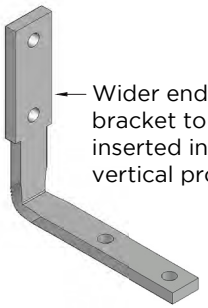

Wider end of the bracket to be inserted in the vertical profile

Adjustable corner junction:

- Cut to size the adjustable corner profiles
- Adjust the angle if necessary (if not 90°) then screw the three profiles together
- Fix to the horizontal tracks with the same angle brackets used on the wall starting profile

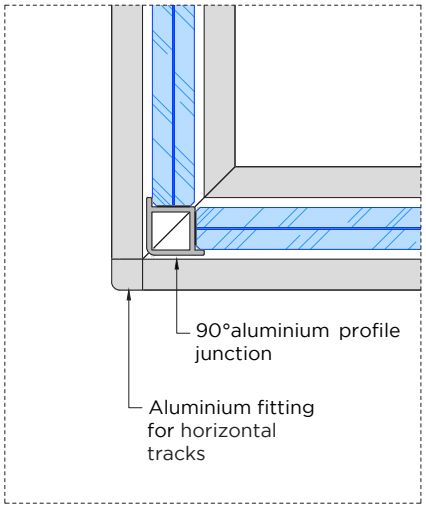

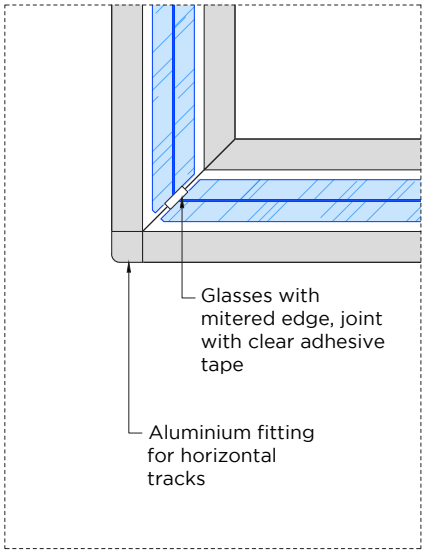

Other solutions for 90°corner junctions

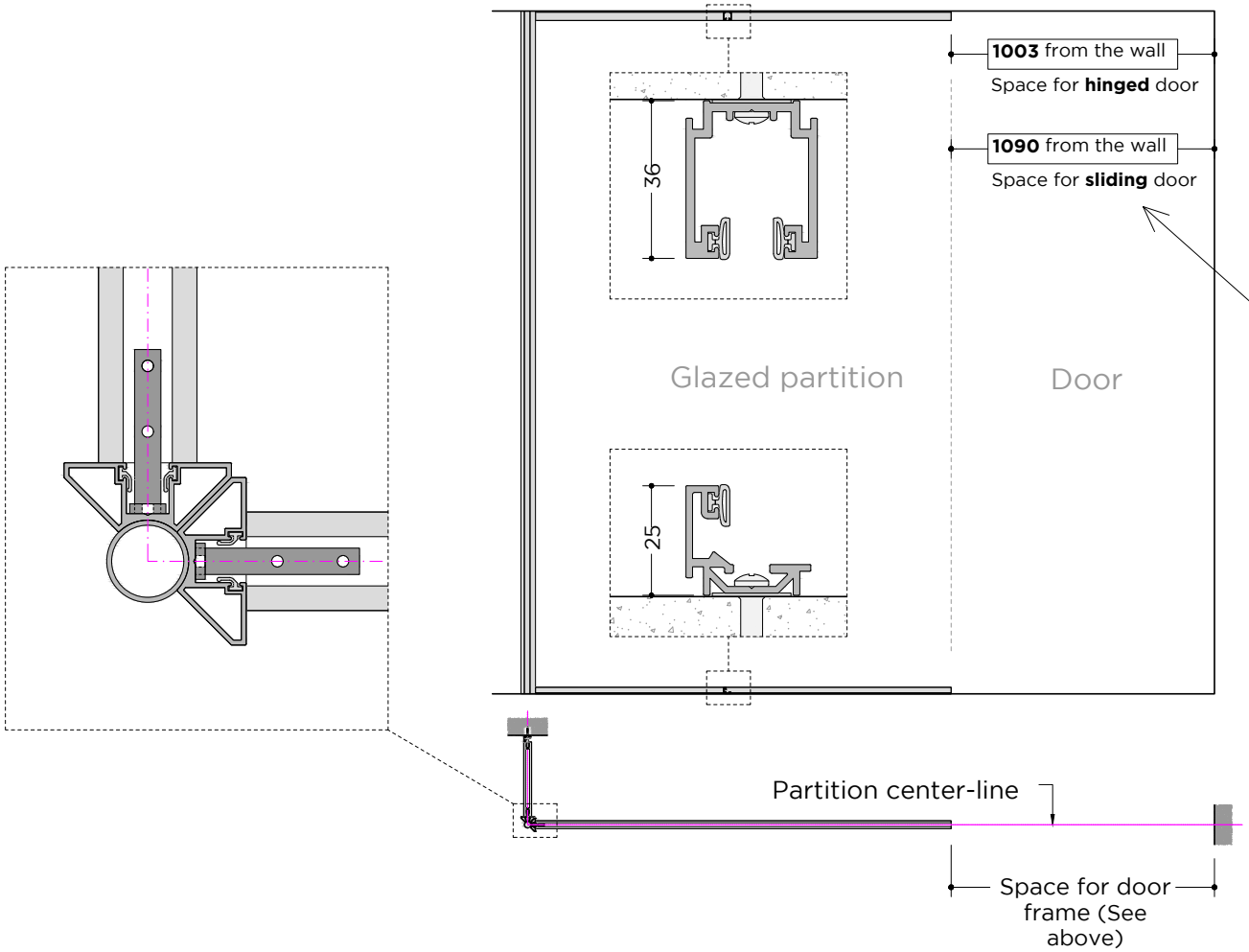

NOTE:
Necessary dimension +/- 3 mm to install the door frame with one side against the wall.

In case of doors in the middle of a partition, standard size is: **993** mm for hinged door **1080** mm for sliding door
(double check the dimensions on the plan)

Install the horizontal tracks next to the corner junction

- Check on the plan if they were supplied at exact size or need to be cut on site; cut if required
- Attach on the back side 19 mm white adhesive tape
- Fix the tracks to the floor and ceiling with screws and plugs
- Screw to the corner post with the angle brackets
- Install the inox clips

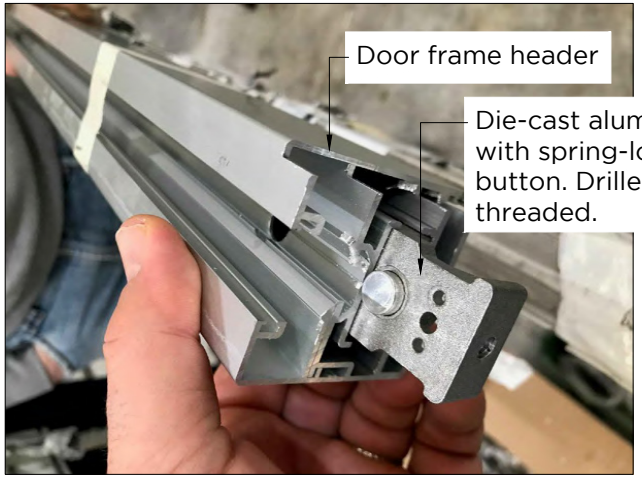

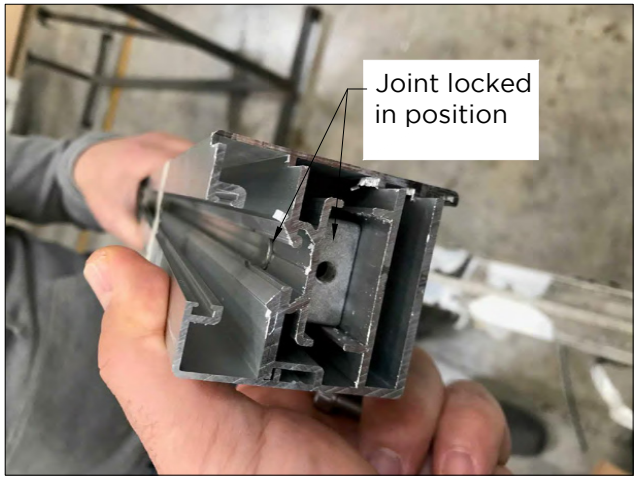

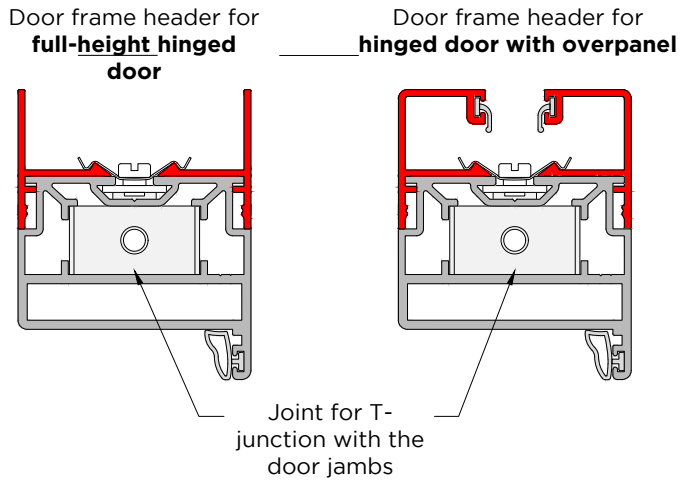

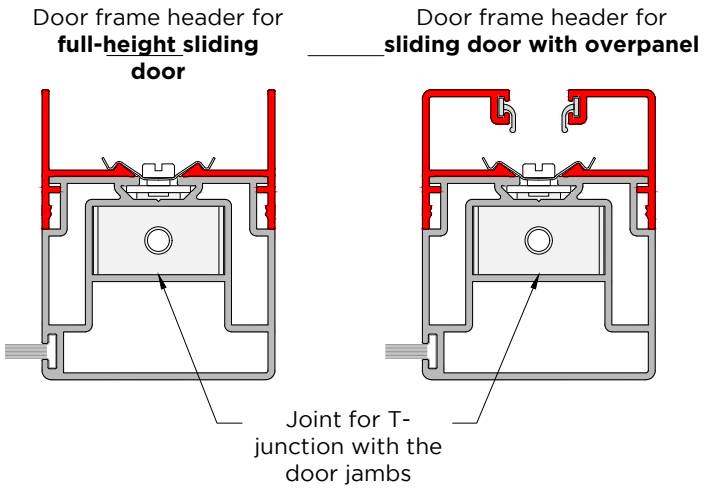

Preparation of the door frame header (for hinged or sliding door):

- Insert the aluminium joint on both sides of the header profile (see photos)
- Insert the inox clips in the frame profiles, header and jambs - Max distance from each other **300 mm**
- Install the clip-in profiles, one side only

NOTE: Clip-in profiles are different in case the door is full-height or with overpanel (see drawing)

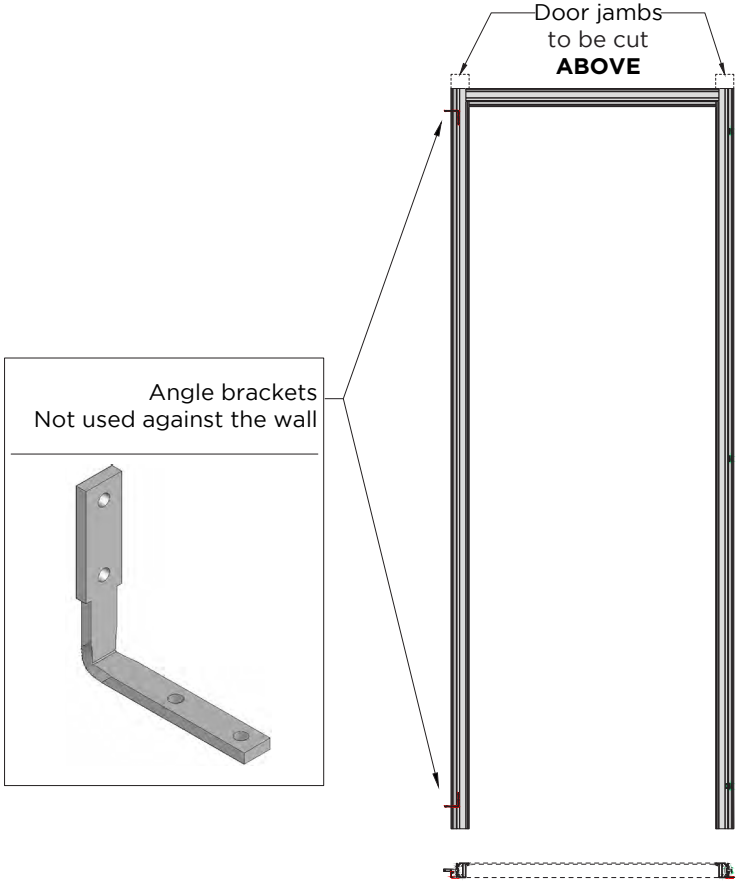

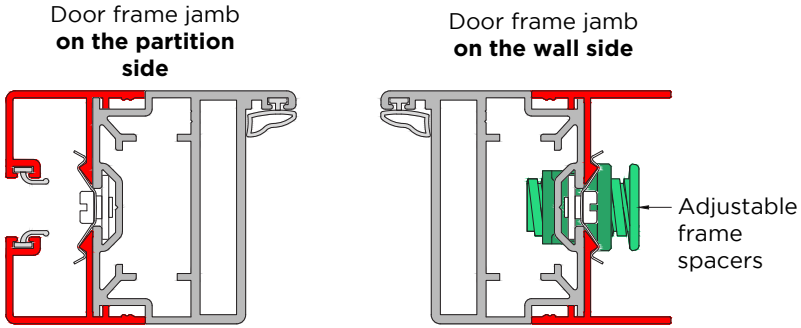

Preparation of door jambs (for hinged or sliding door):

- Cut to size the jambs, according to the actual height of the ceiling, **CUT ONLY ON THE UPPER SIDE** unless specifically asked
- Insert the inox clips, max distance from each other **300 mm**
- install the clip-in profiles, one side only
  NOTE: the clip-in profiles are different in case the jamb is against the wall or the partition continues next to the door (see drawing)
- Join the frame jambs and header with socket head screws, M6x25 mm
- Insert in the jamb on the partition side the angle brackets for junction with the horizontal tracks

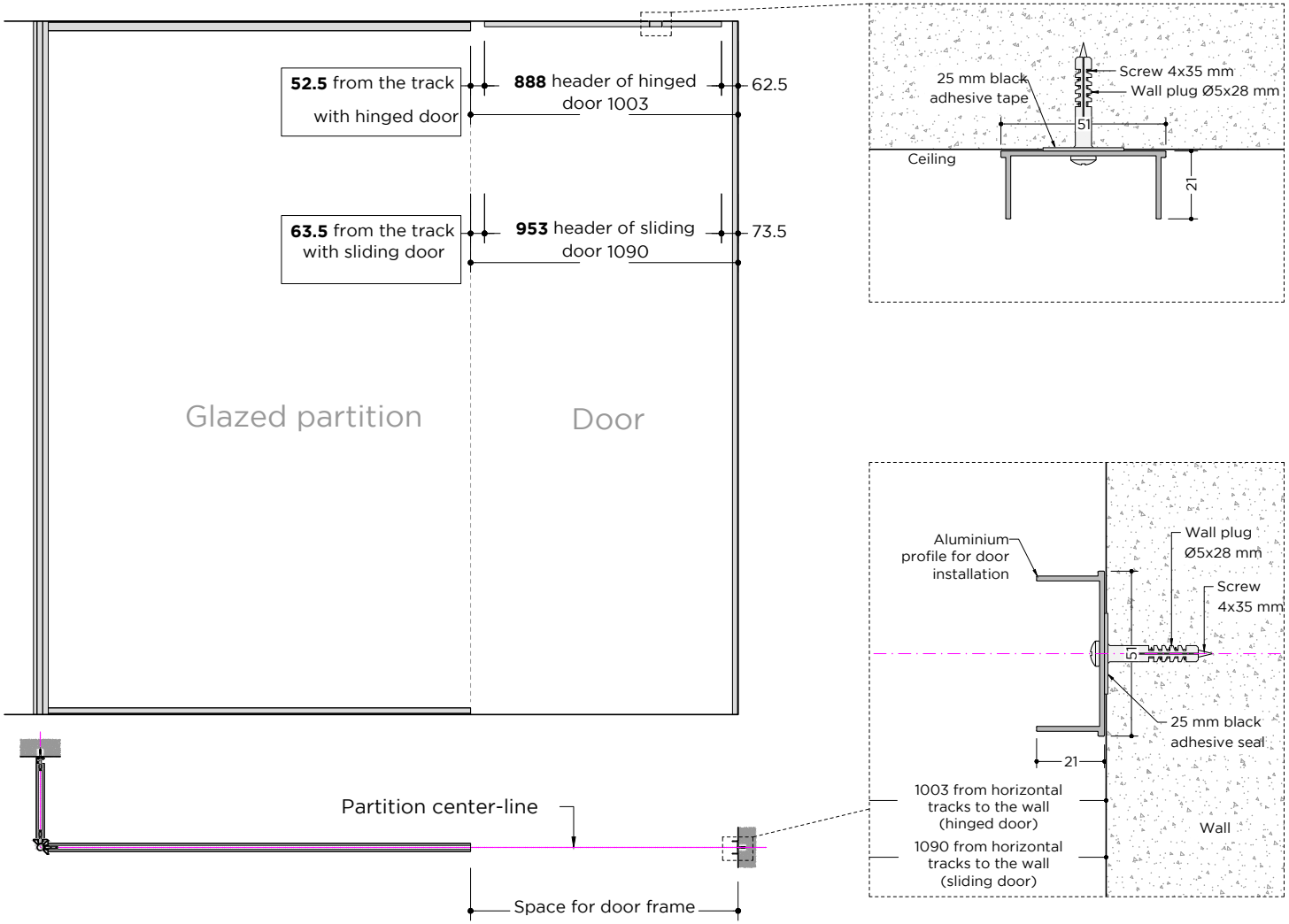

- Cut to size and install the aluminium "C" profiles for installation of the door against a wall
- Install the "C" profile for the frame header. **Note the dimensions on the drawing**
- Fix both profiles with screws and plugs Ø5x28 mm

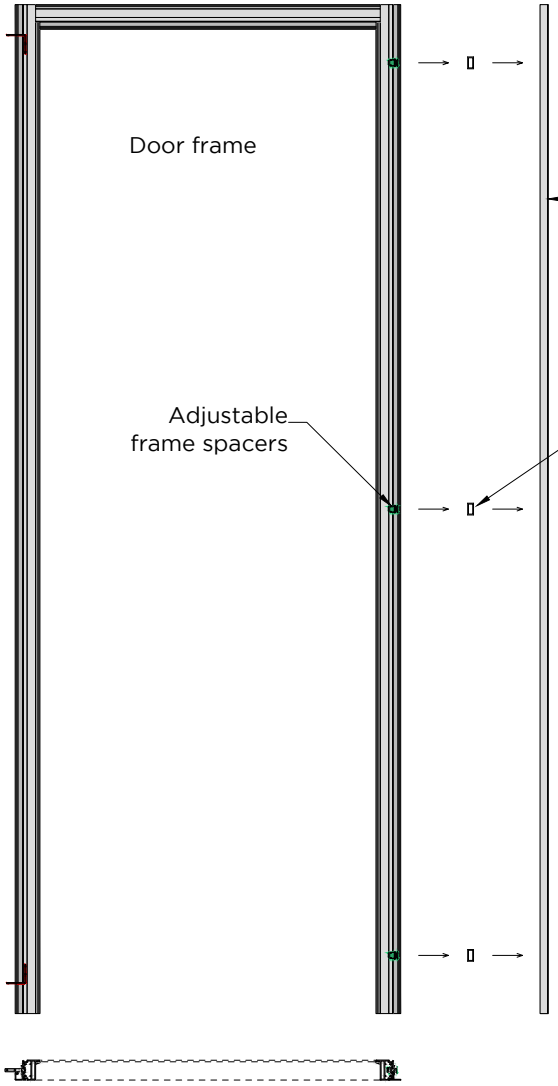

Aluminium "C" profile, previously attached to the wall

Aluminium spacers

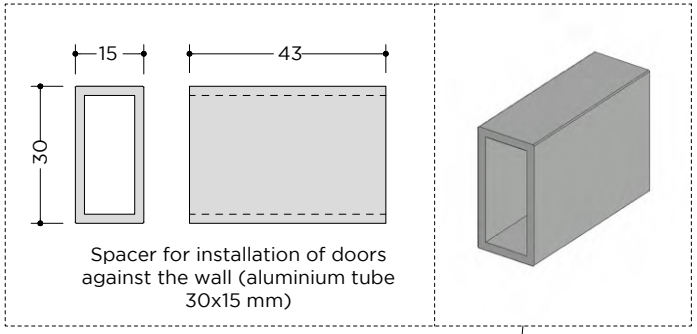

Spacer for installation of doors against the wall (aluminium tube 30x15 mm)

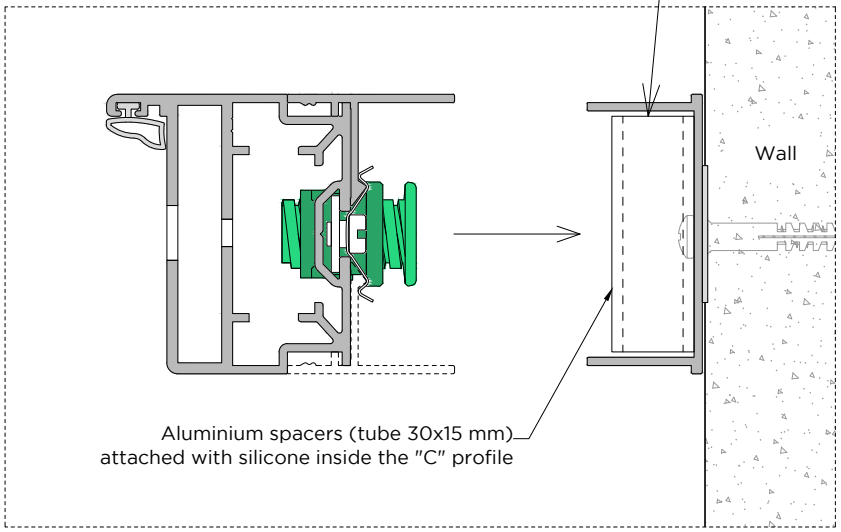

Aluminium spacers (tube 30x15 mm) attached with silicone inside the "C" profile

- Insert the aluminium spacers inside the aluminium "C" profile, at the same height as the adjustable spacers preinstalled on the door jamb.
  Keep them in place with a drop of silicone

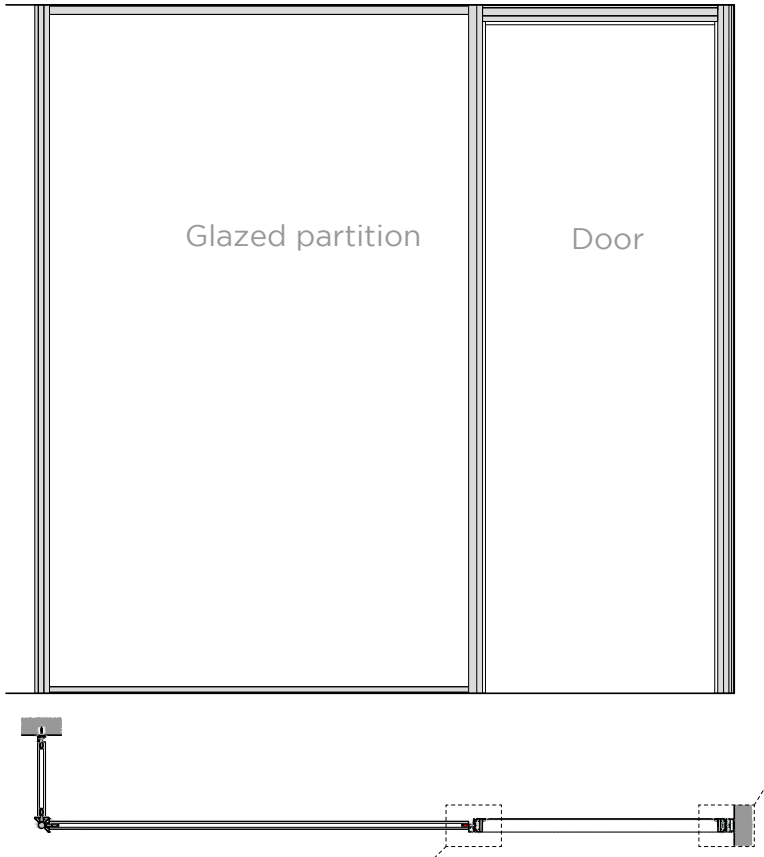

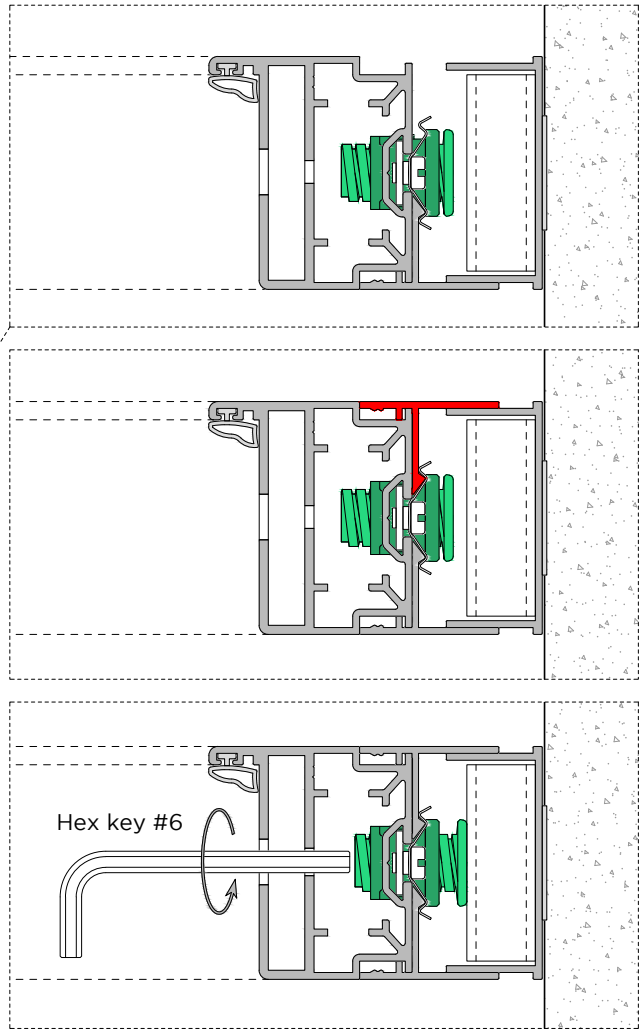

Fix with:
Self-drilling countersunk screws 3,5x13 mm

Self-tapping pan head screws 3,5x9,5 mm

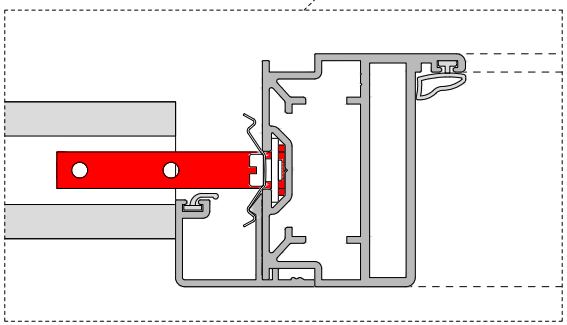

- Position the door frame, with clip-in profiles installed on one side only
- Screw in the frame to the horizontal tracks using the angle brackets
- Install the clip-in profile on the wall-side jamb and header
- Adjust the frame spacers with a #6 hex key

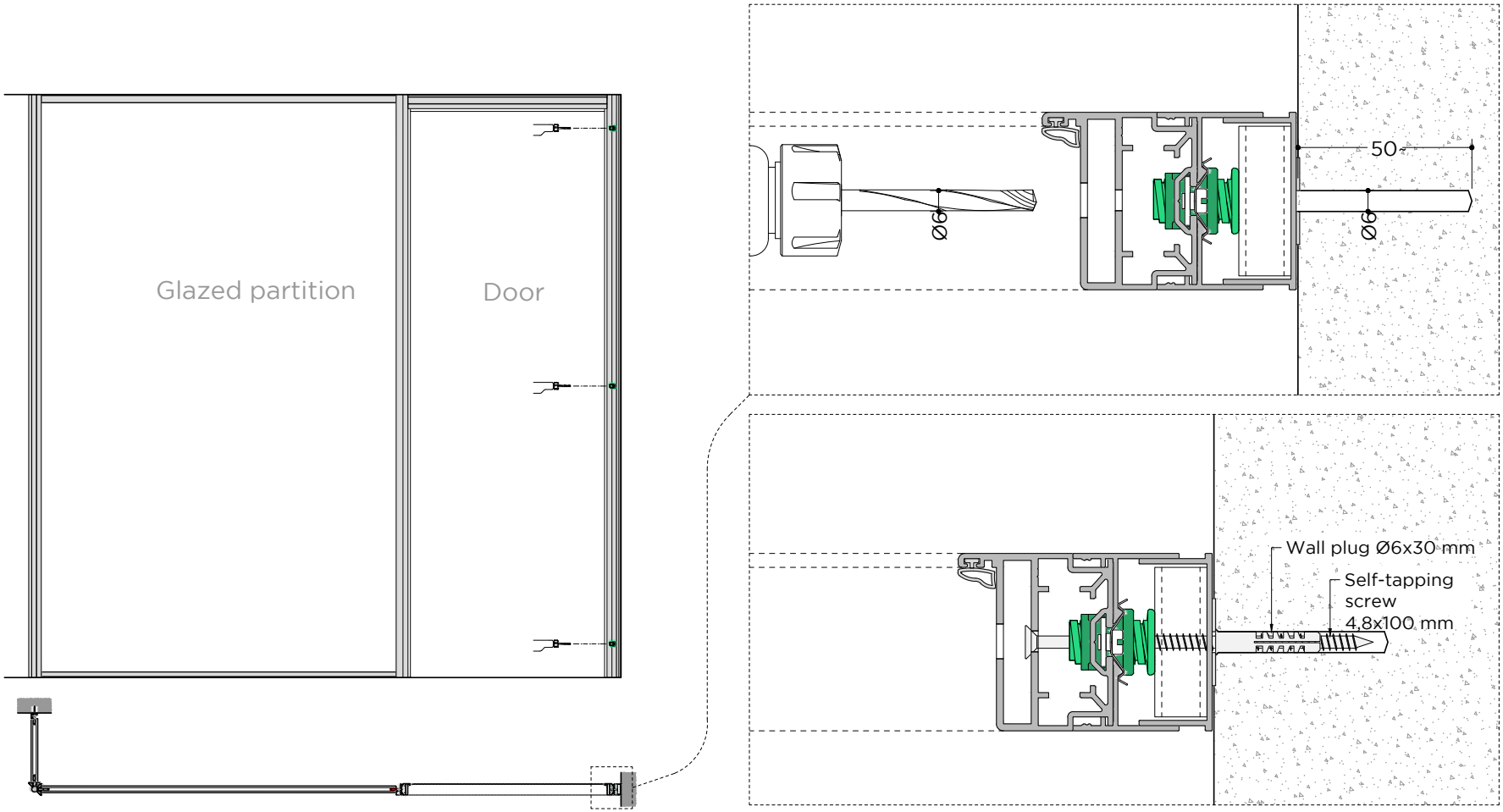

- Drill through the adjustable frame spacer to the side wall, Ø6 x depth about 50 mm
- Fix the door frame with wall plugs Ø6x30 mm and long screws 4.8x100 mm

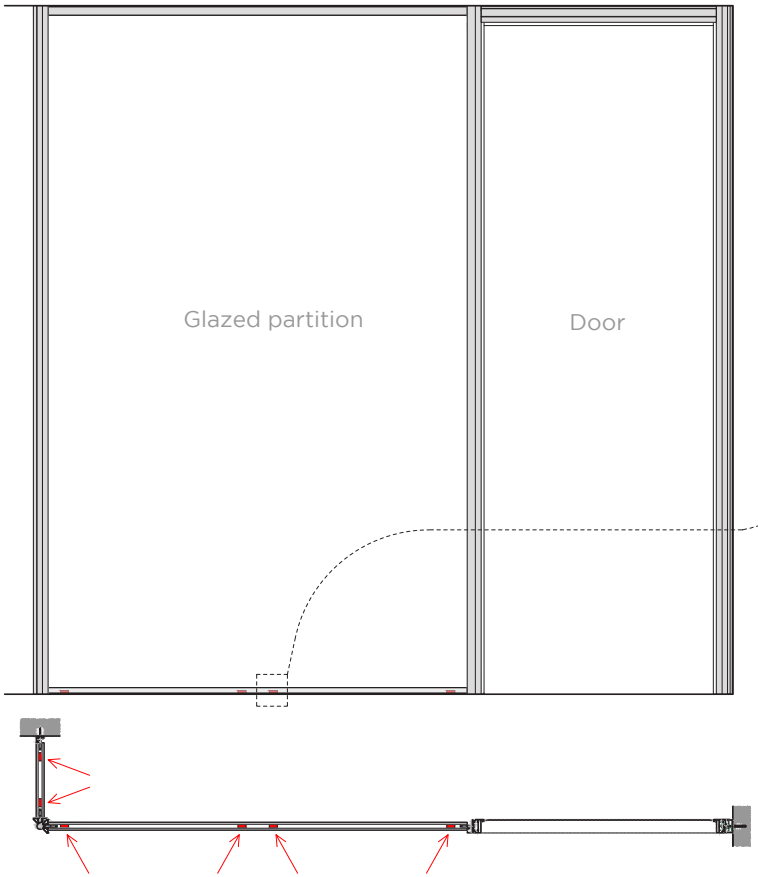

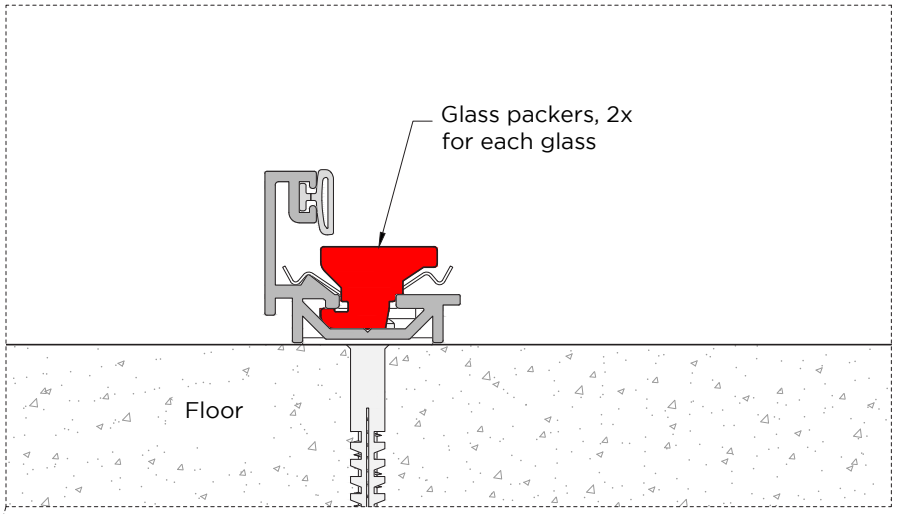

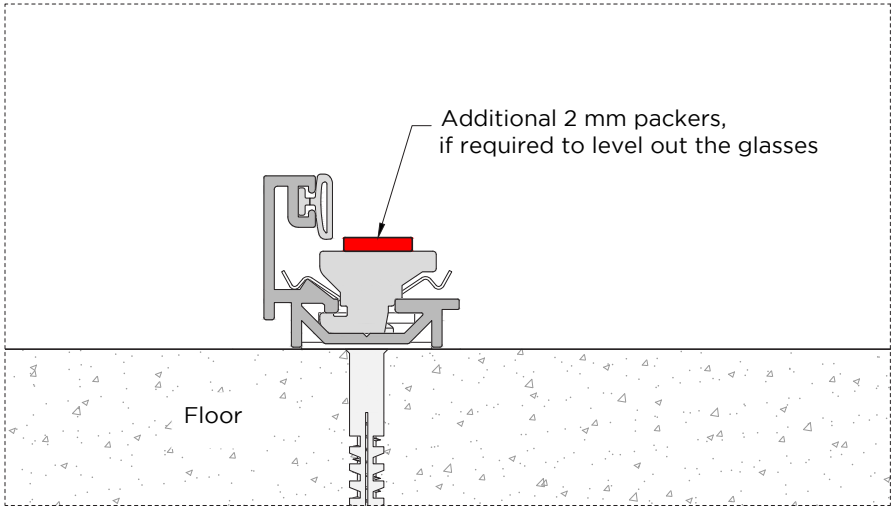

- Insert the glass packers in the floor tracks
- Use additional 2 mm packers, if necessary to level out the glasses, in case the floor is not even

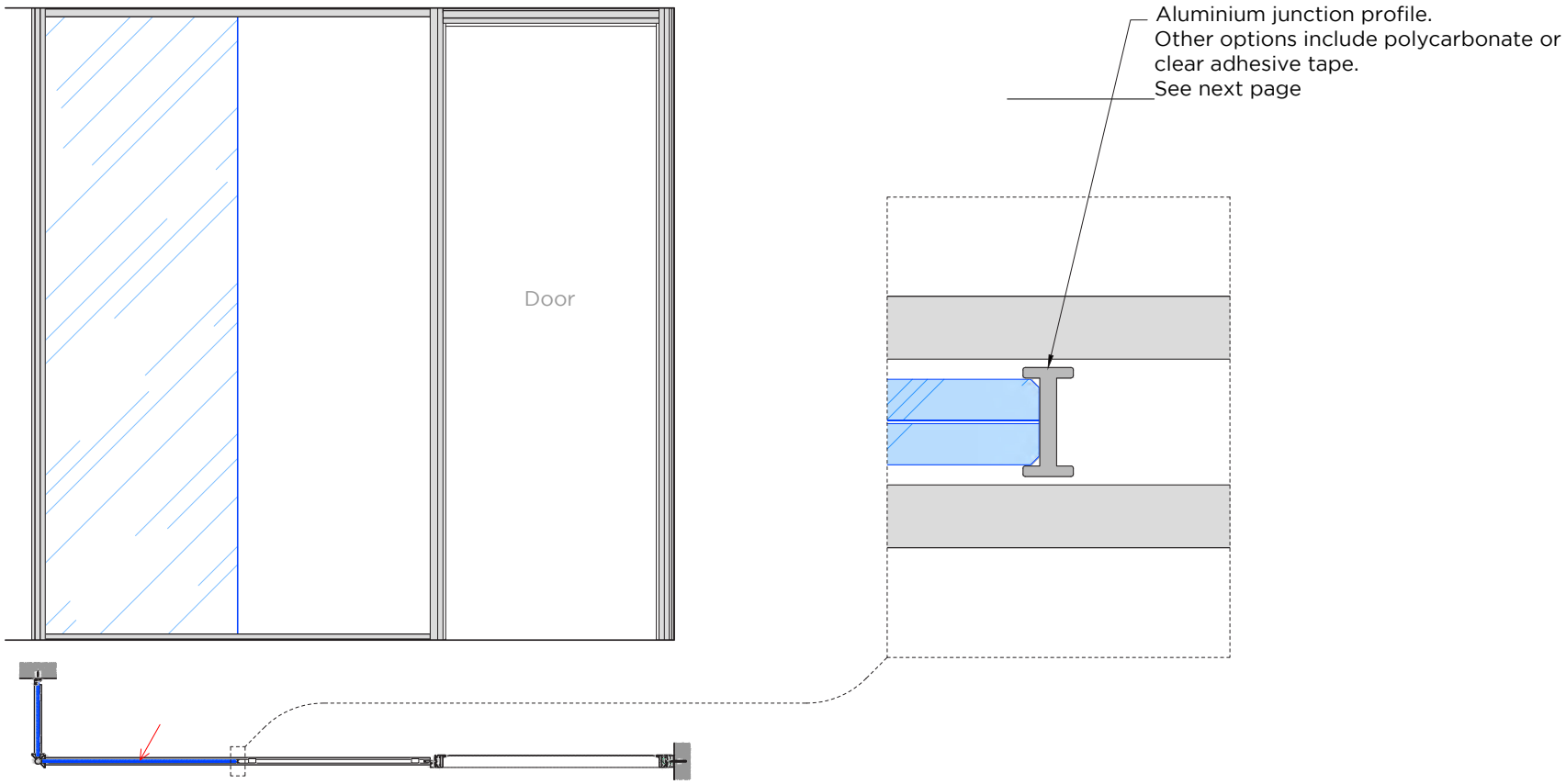

- Start to position the glass panels
- If necessary, level out the glasses with small packers to make them perfectly plumb
- For partitions composed of two or more glazed panels, cut to size and glue to the edge of each glass the junction profile (or lay the adhesive tape)

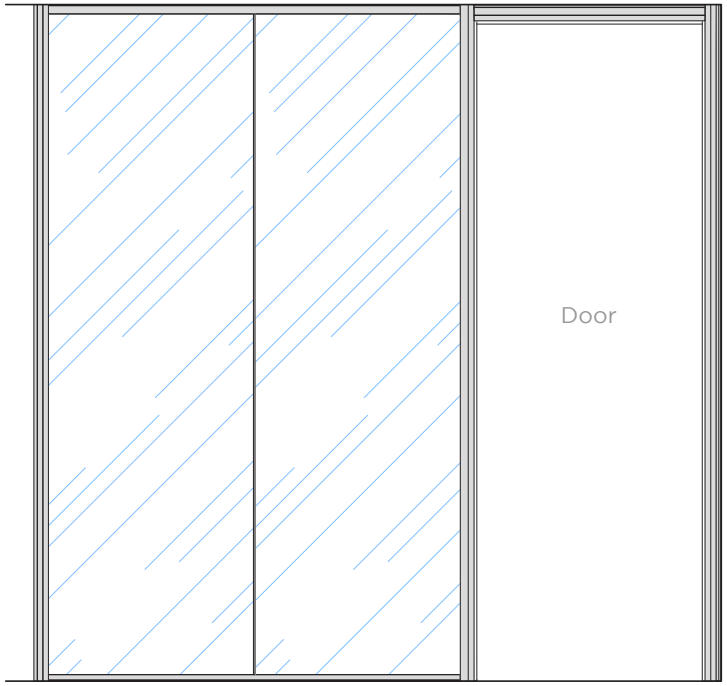

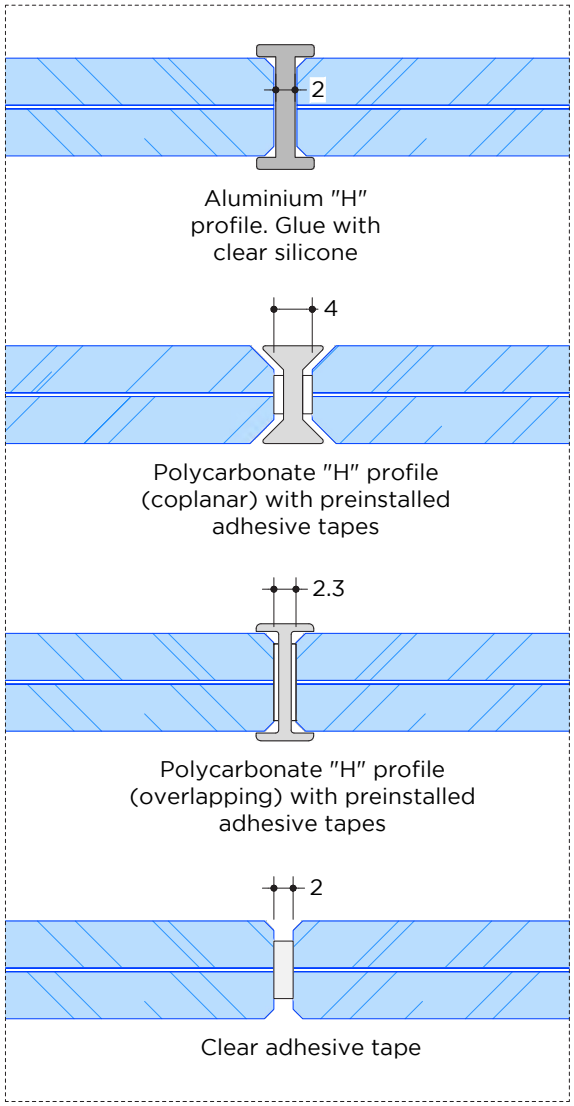

Available options for glazed junctions

- Position all the glasses and glue them to the junction profiles with clear silicone or clear adhesive tape, see drawing.
- Install the clip-in profile on floor and wall starting tracks

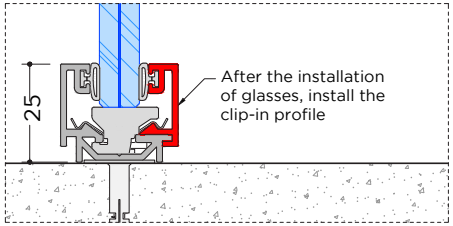

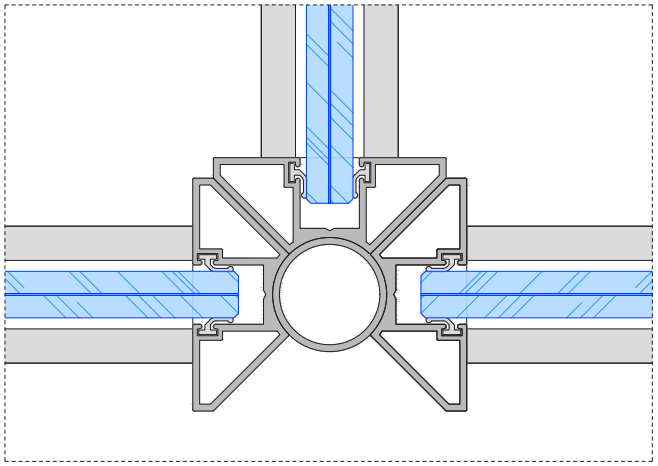

Adjustable profile, 90° junction

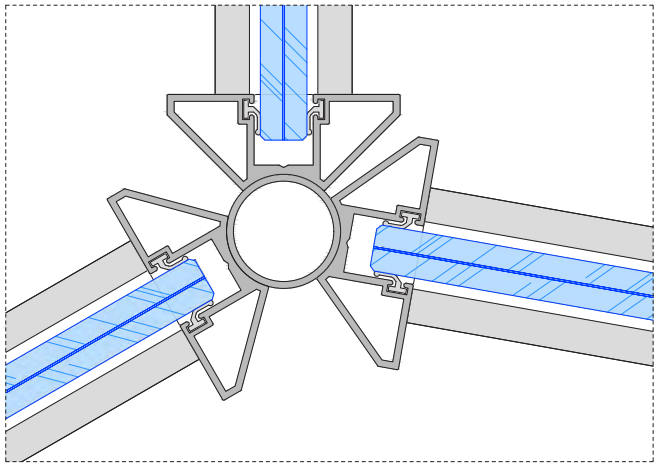

Adjustable profile, different angles

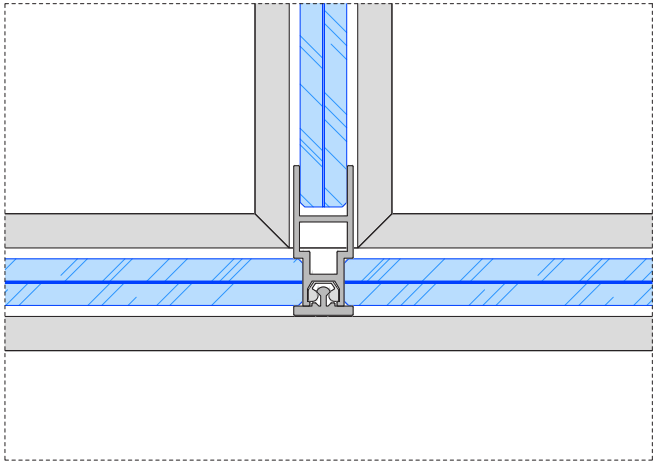

2-parts aluminium profile (only 90° junction)

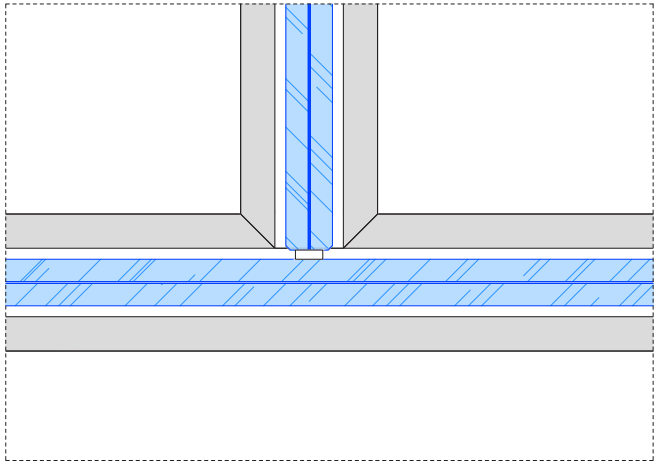

Full glazed, with clear adhesive tape

Three-way junctions (if included in the project)

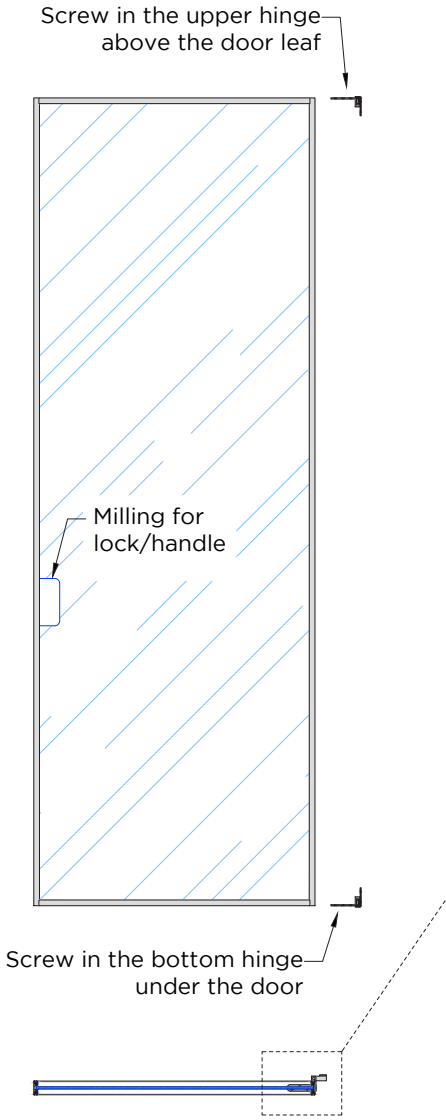

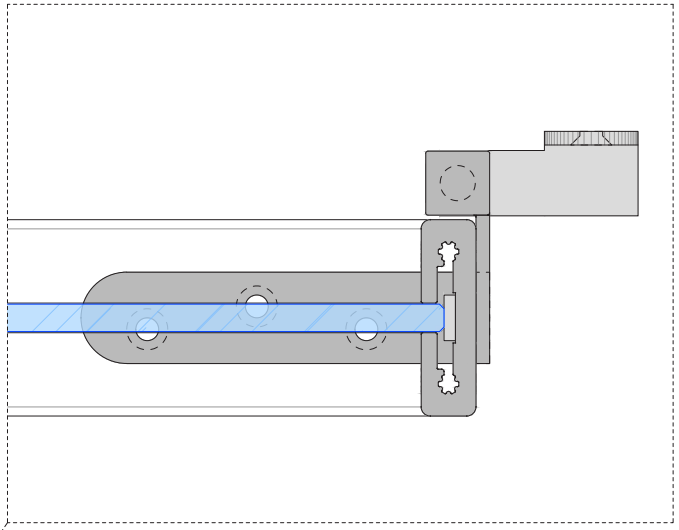

Hinged framed door (if included in the project)
example with thin-framed door:
- Prepare the door leaf installing the top and bottom hinges

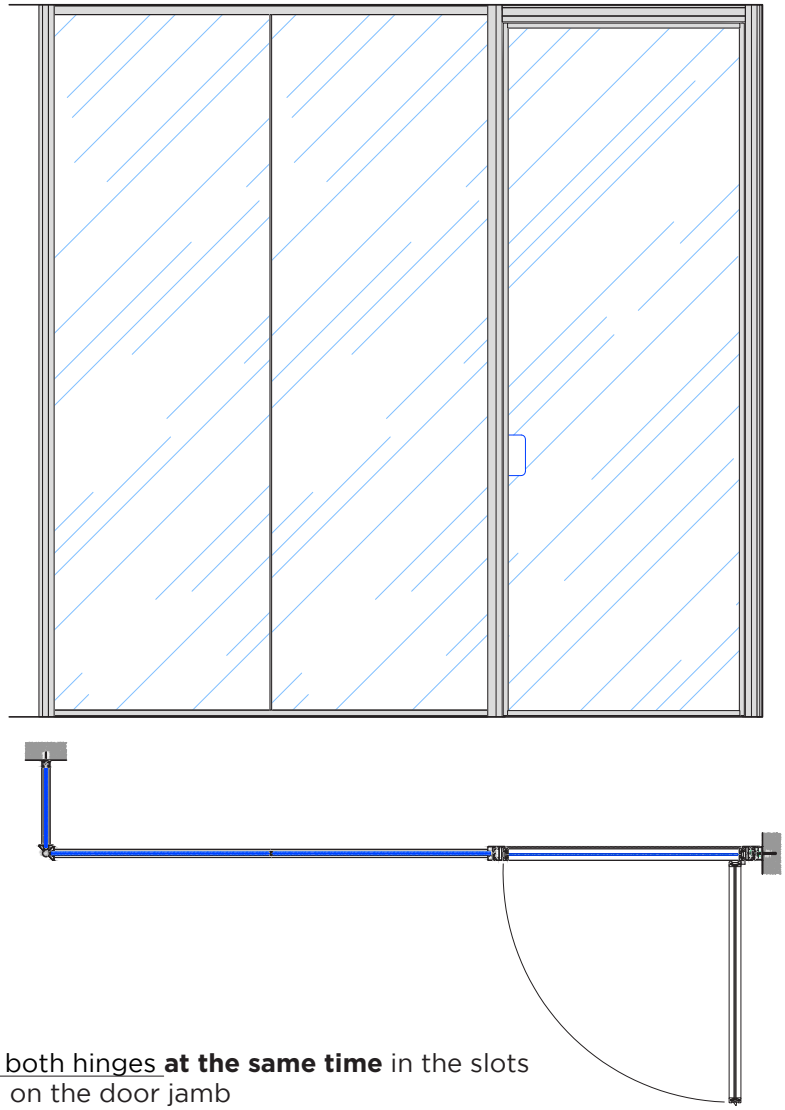

- Insert both hinges **at the same time** in the slots milled on the door jamb
- Fix with screws.

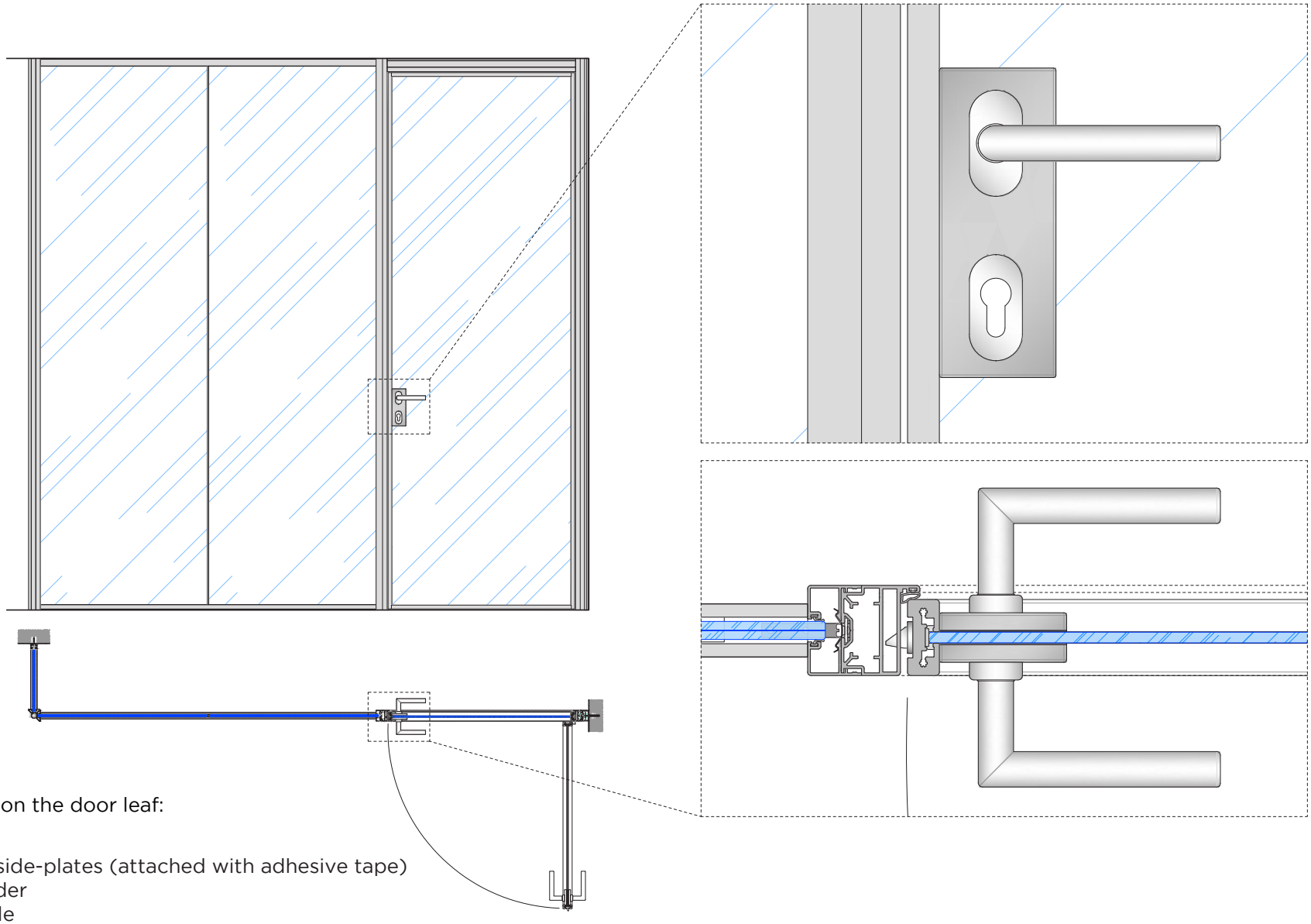

Install on the door leaf:

- lock
- lock side-plates (attached with adhesive tape)
- cylinder
- handle

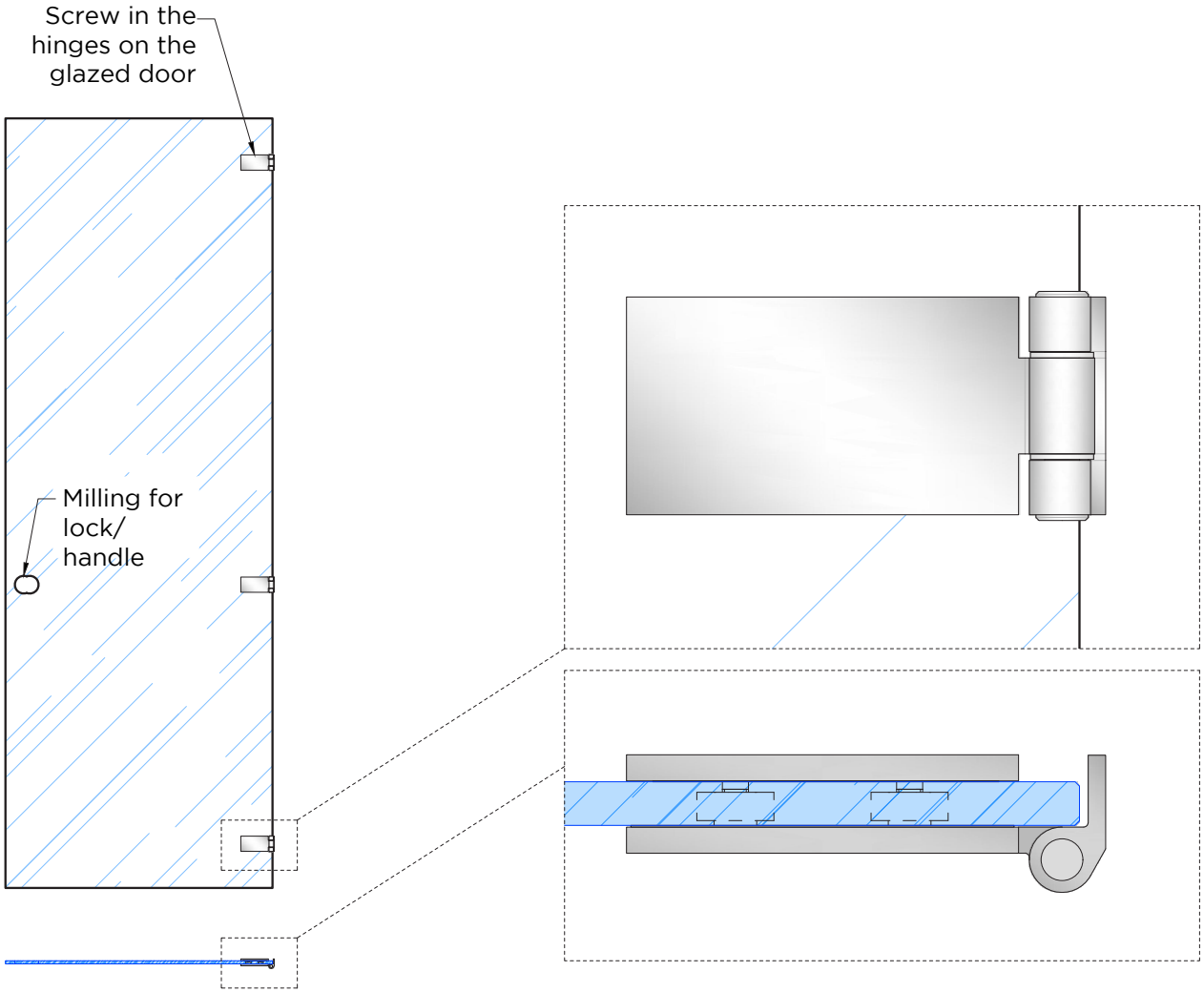

Hinged glass door (if included in the project)
- Prepare the door leaf installing the hinges

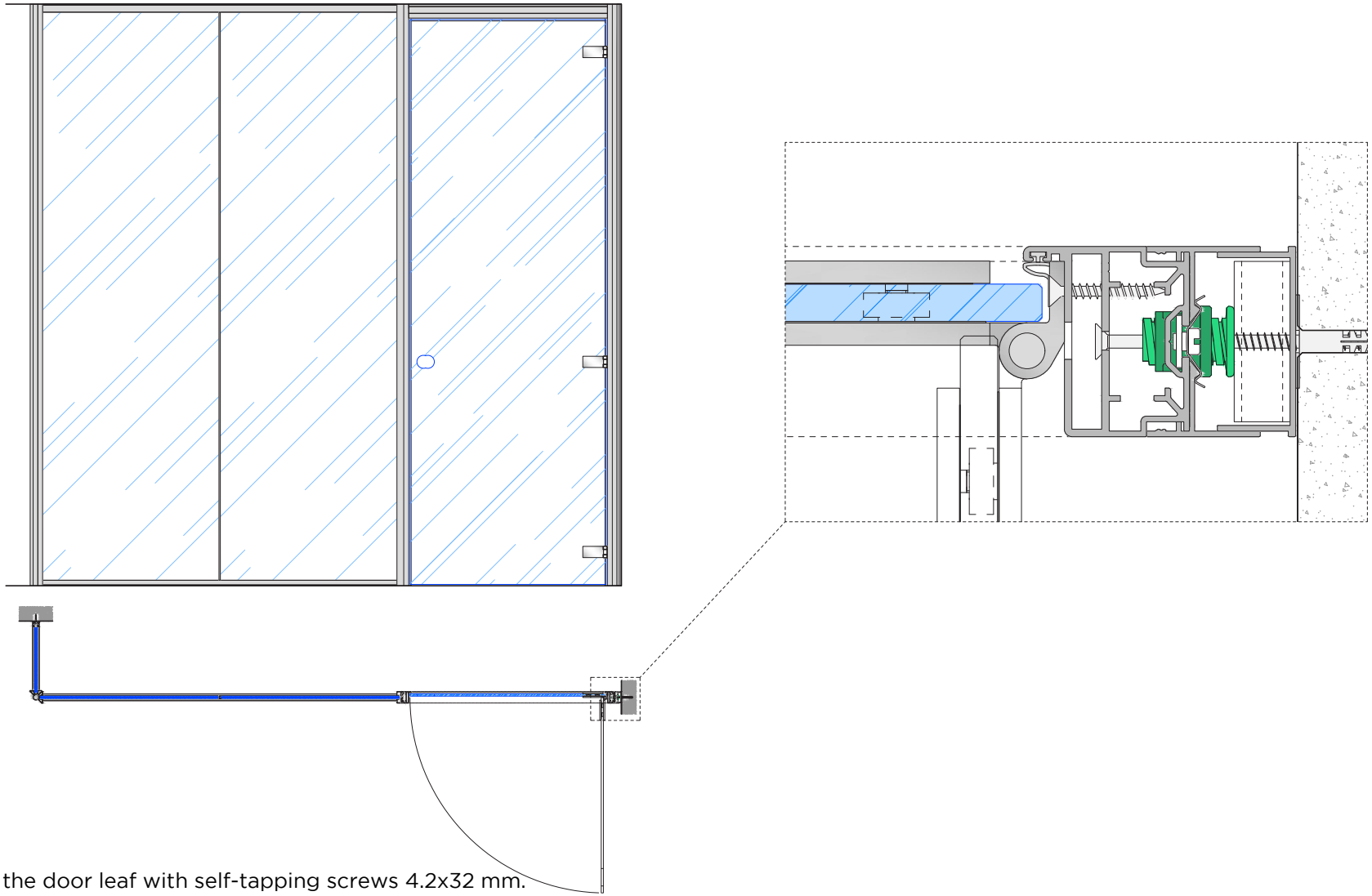

- Install the door leaf with self-tapping screws 4.2x32 mm.
  Holes are pre-drilled on the door jamb

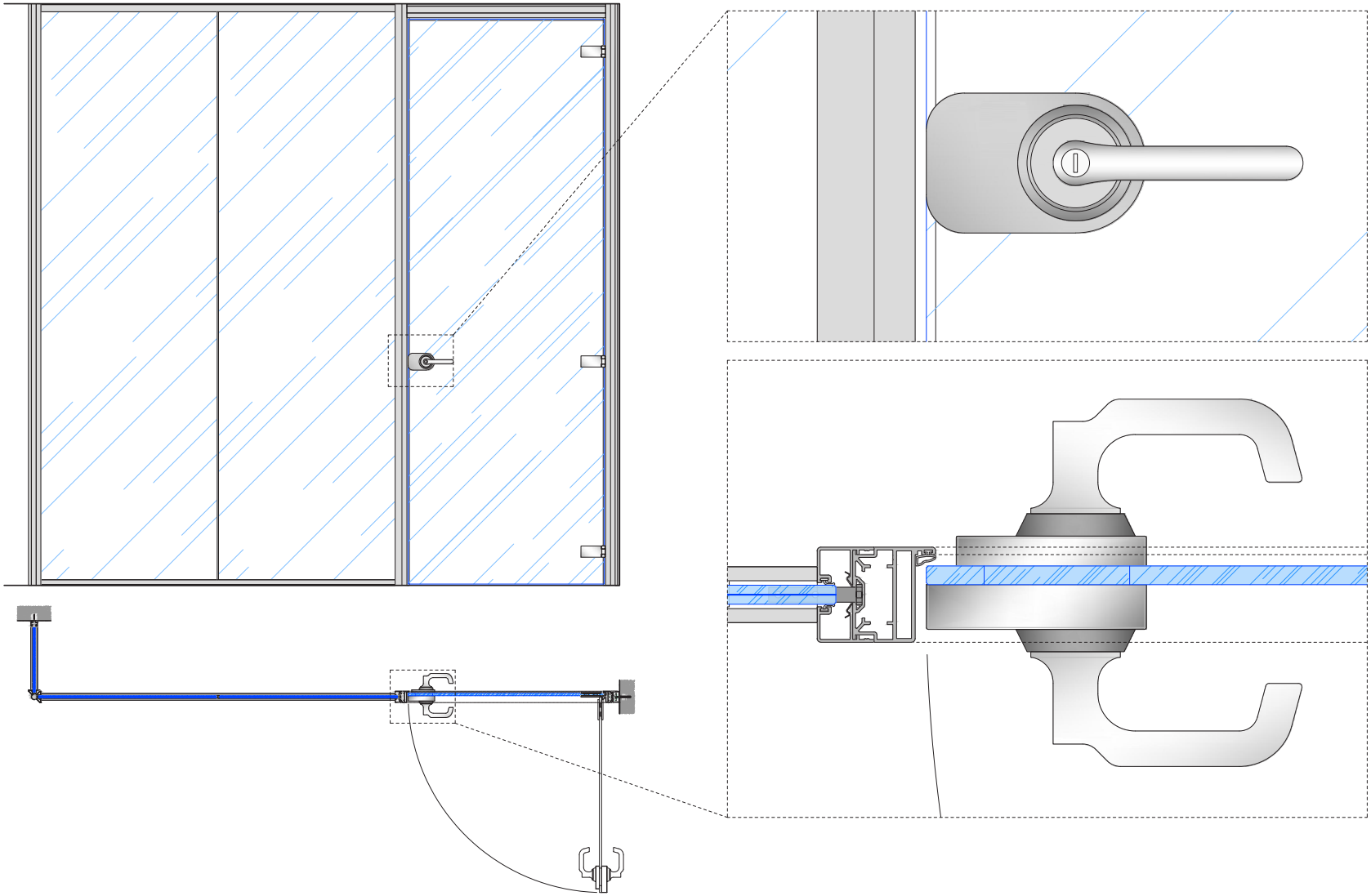

- Install on the door leaf handle and lock

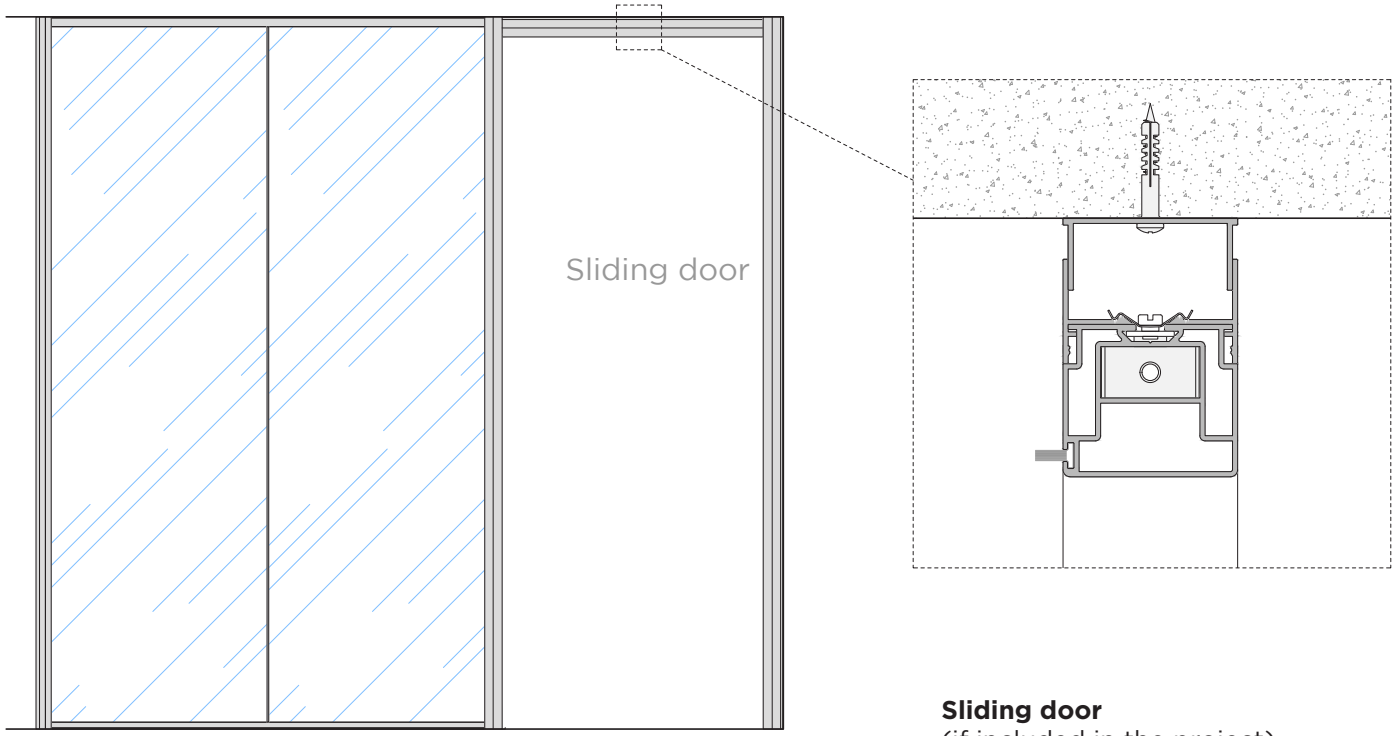

Sliding door
(if included in the project)

- Assemble and install the door frame as shown for the hinged door (see pages 5 to 10)

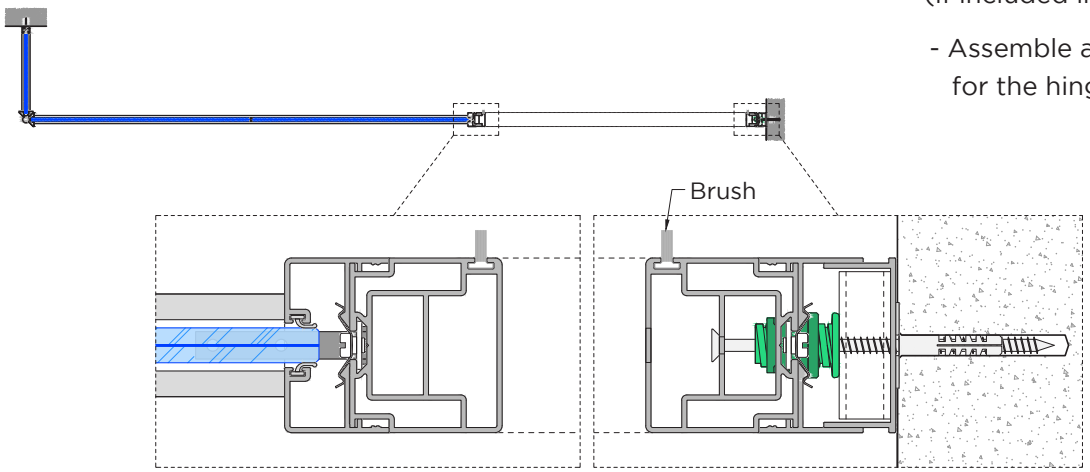

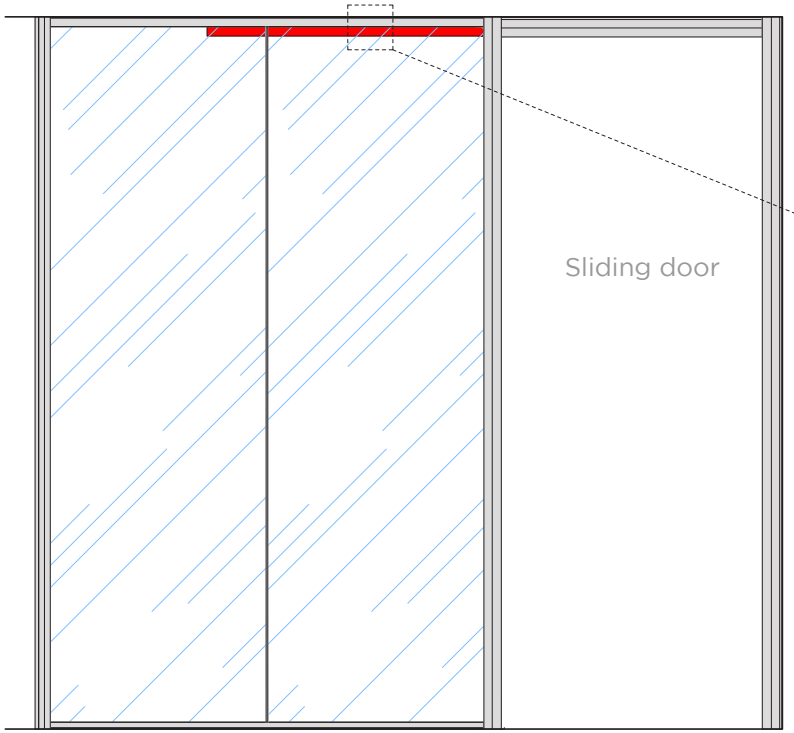

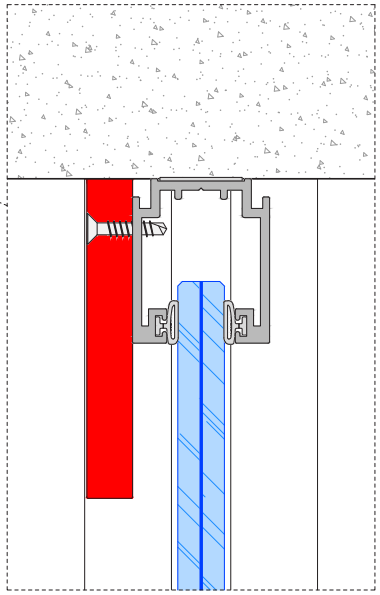

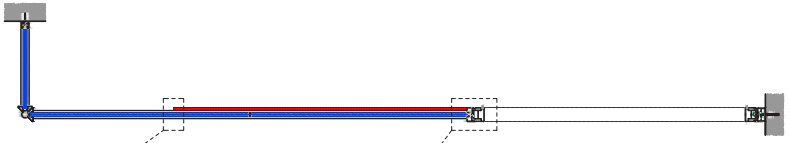

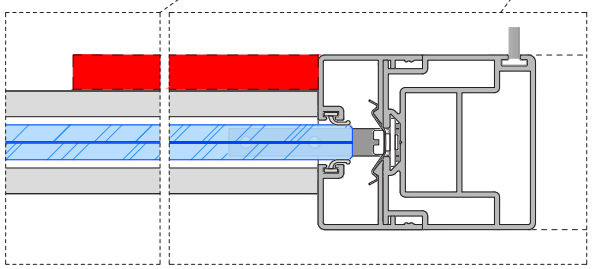

- Fix on the side of the ceiling track the 70x10 mm aluminium plate, to hide the sliding system
- Cut to size if necessary to make it line up with the sliding rail track; standard length of the rail is **2160 mm** + **2** mm on each side for the end caps
- Put the screws very close to the ceiling to avoid hitting the glasses later

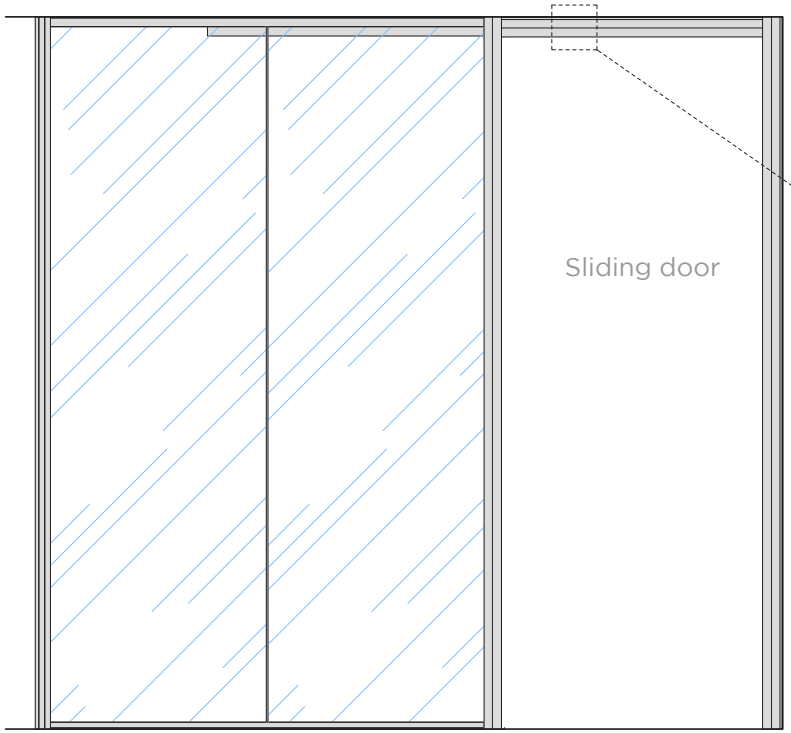

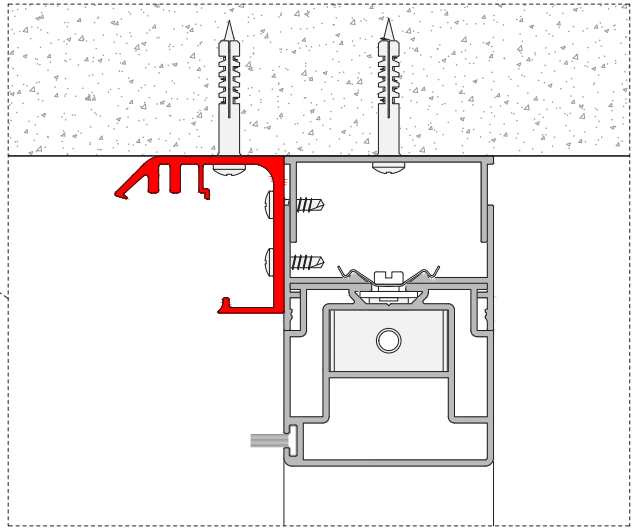

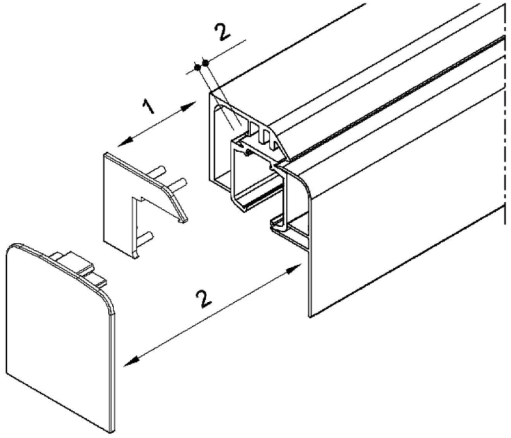

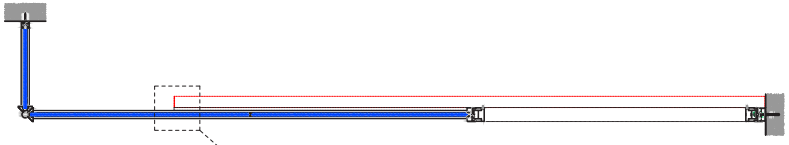

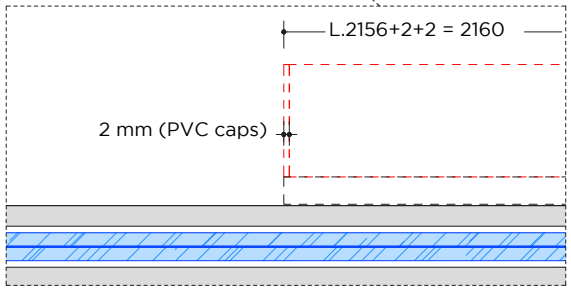

- Install the supporting profilo for the sliding rail
- Fix above on the ceiling and sideway on the partition framing
- Standard length of this profile is **2156** mm + **2** mm on each side for the end caps NOTE: the rail profilo is 4 mm longer than its supporting profile

(2160 mm +2 mm on each side for an additional end cap)

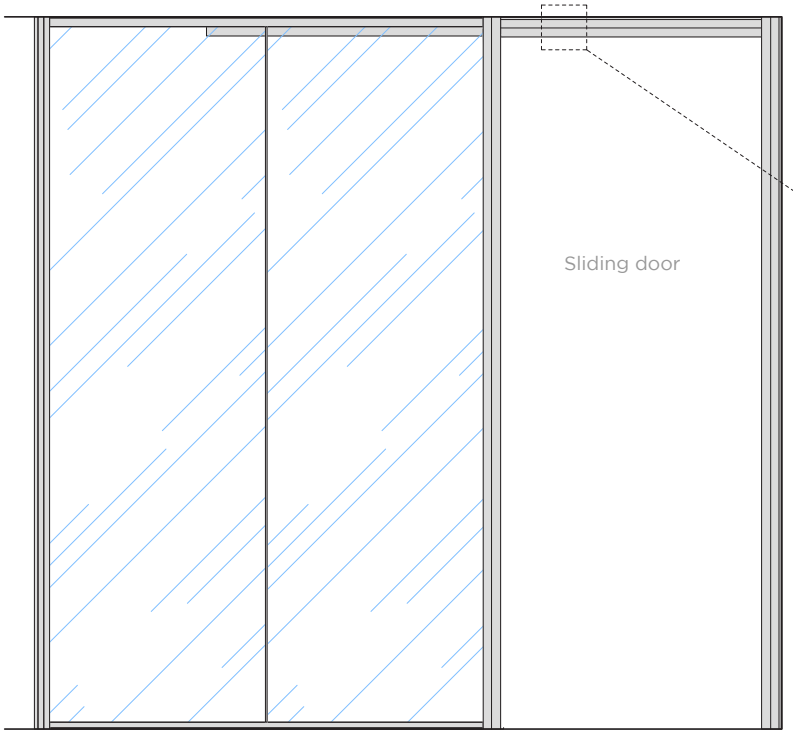

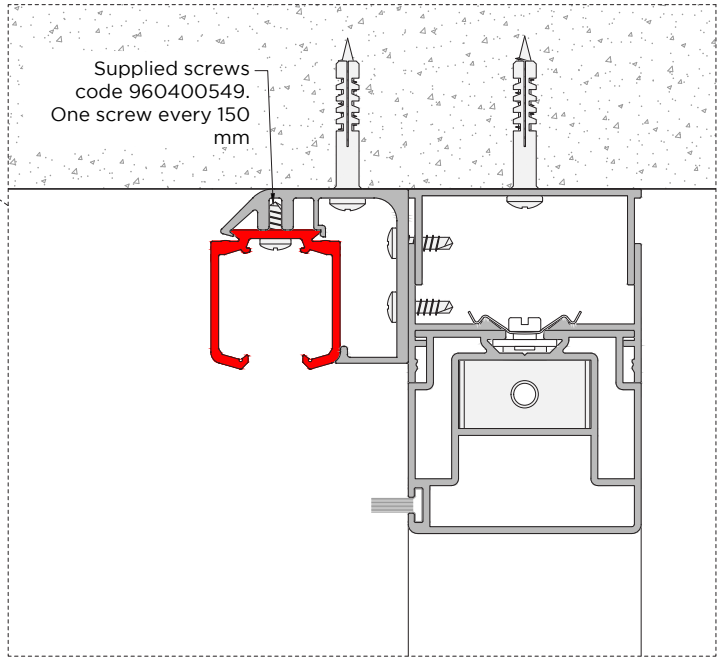

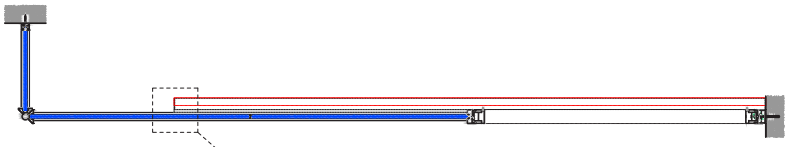

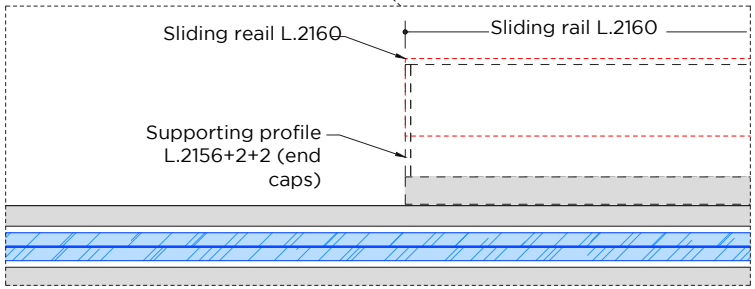

- Insert the sliding rail under the supporting profile
- Fix with the supplied screws (Code 960400549) One screw every 150 mm

Insert the soft-closing wheels system into the rail, following the instructions below

1

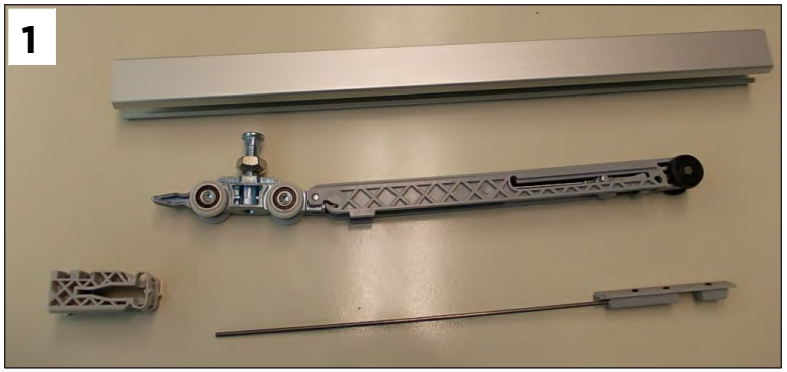

2

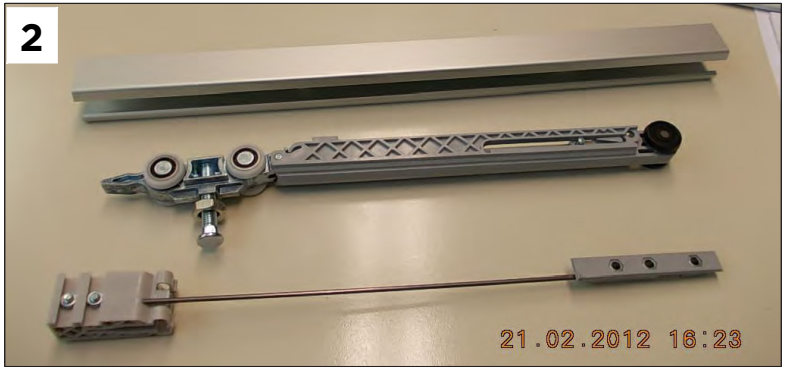

3

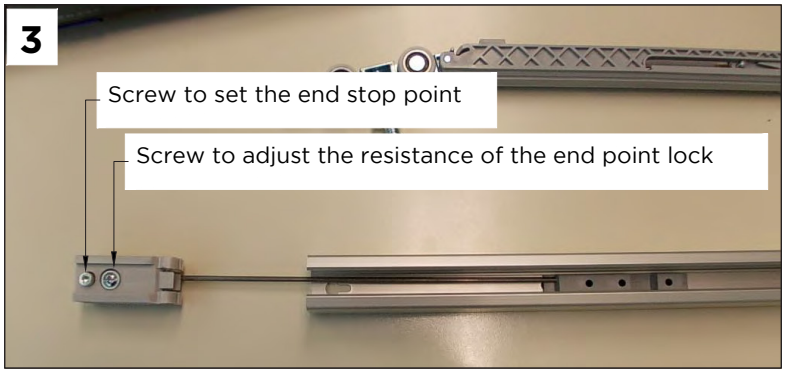

4

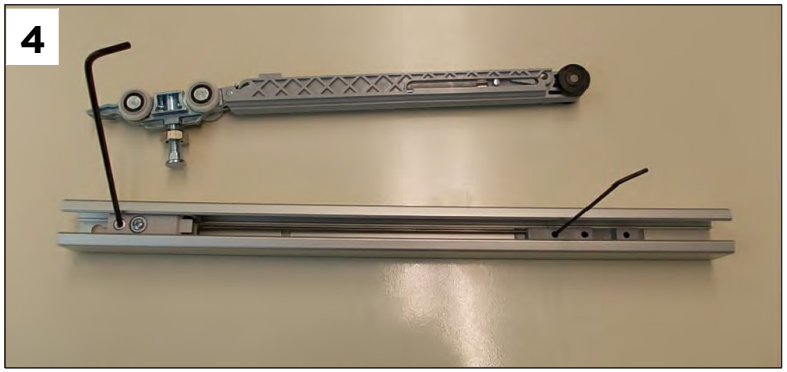

5

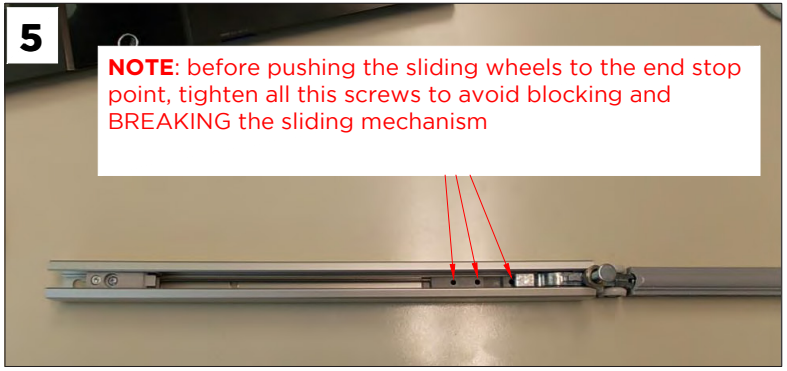

6

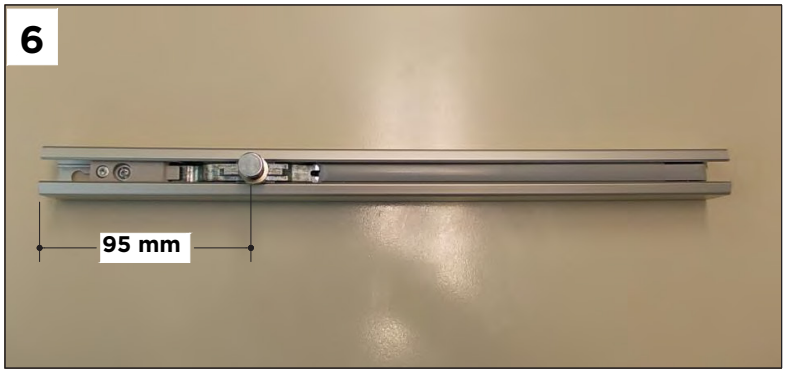

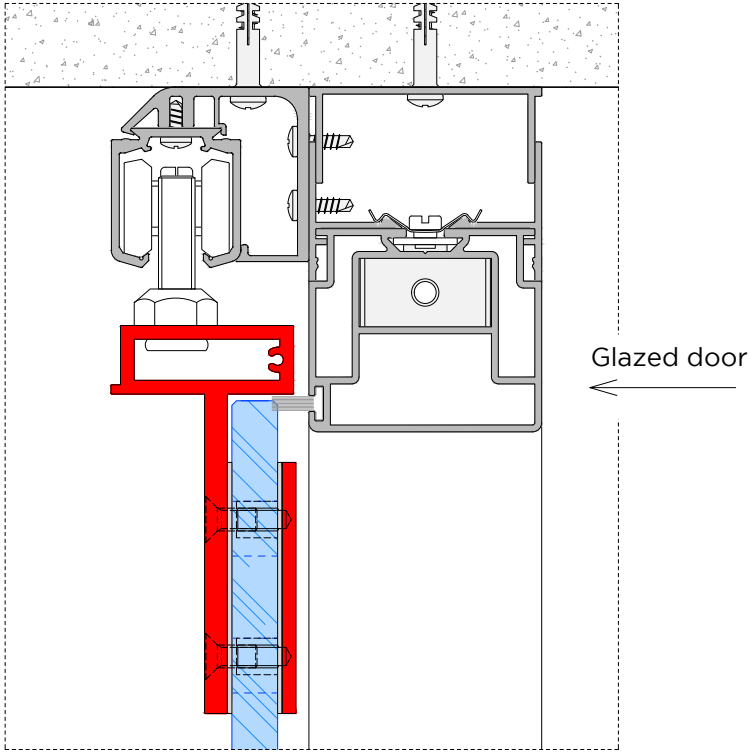

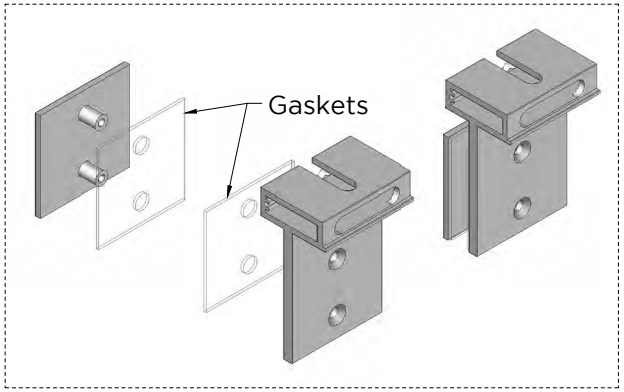

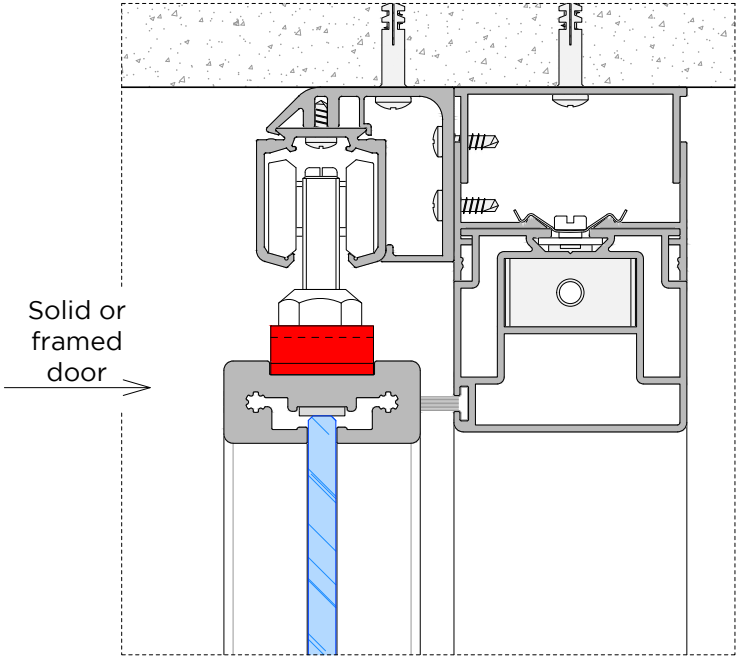

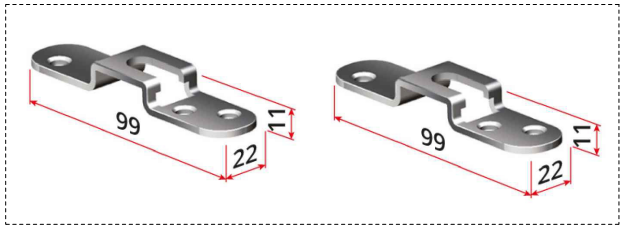

- Prepare the sliding door installing the accessories to hook it to the sliding wheels (different details in case of glass or framed door)
- Install the door and adjust the level
- Install the floor pin

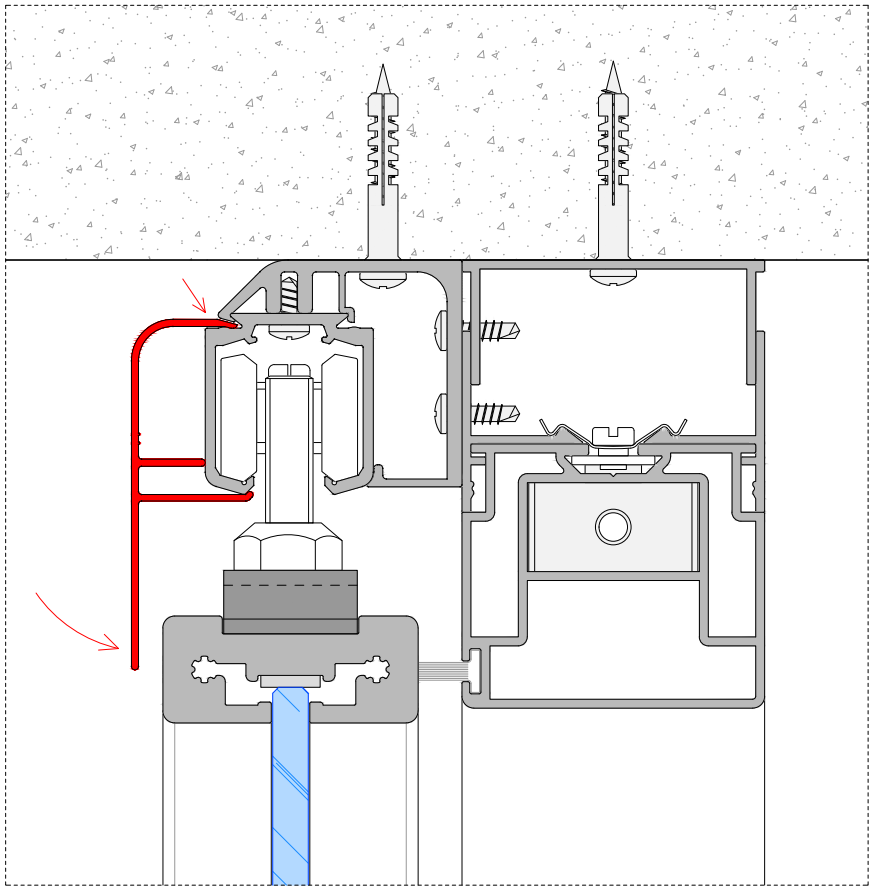

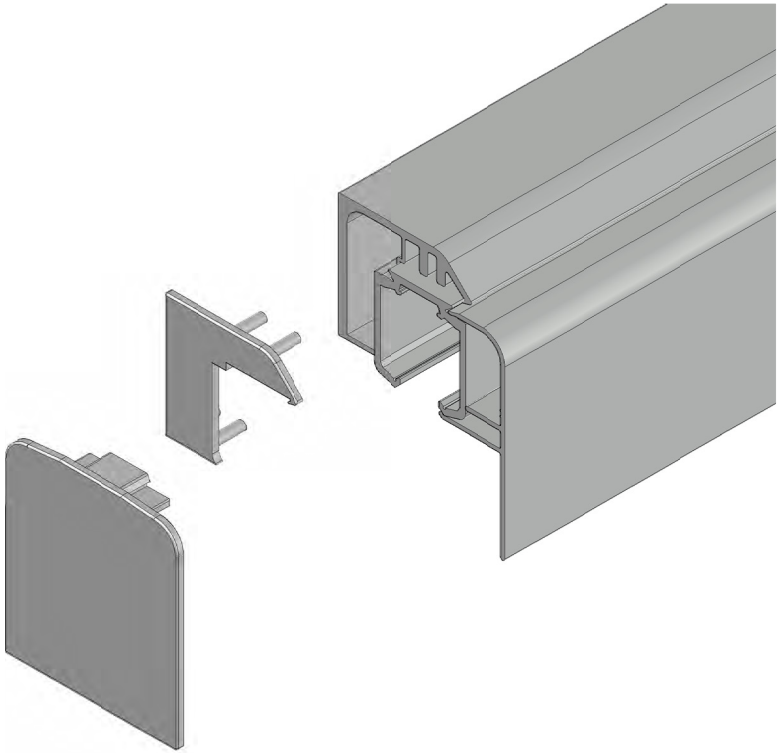

- Install the clip-in cover aluminium profile
- Insert the end caps on both sides of the rail assembly

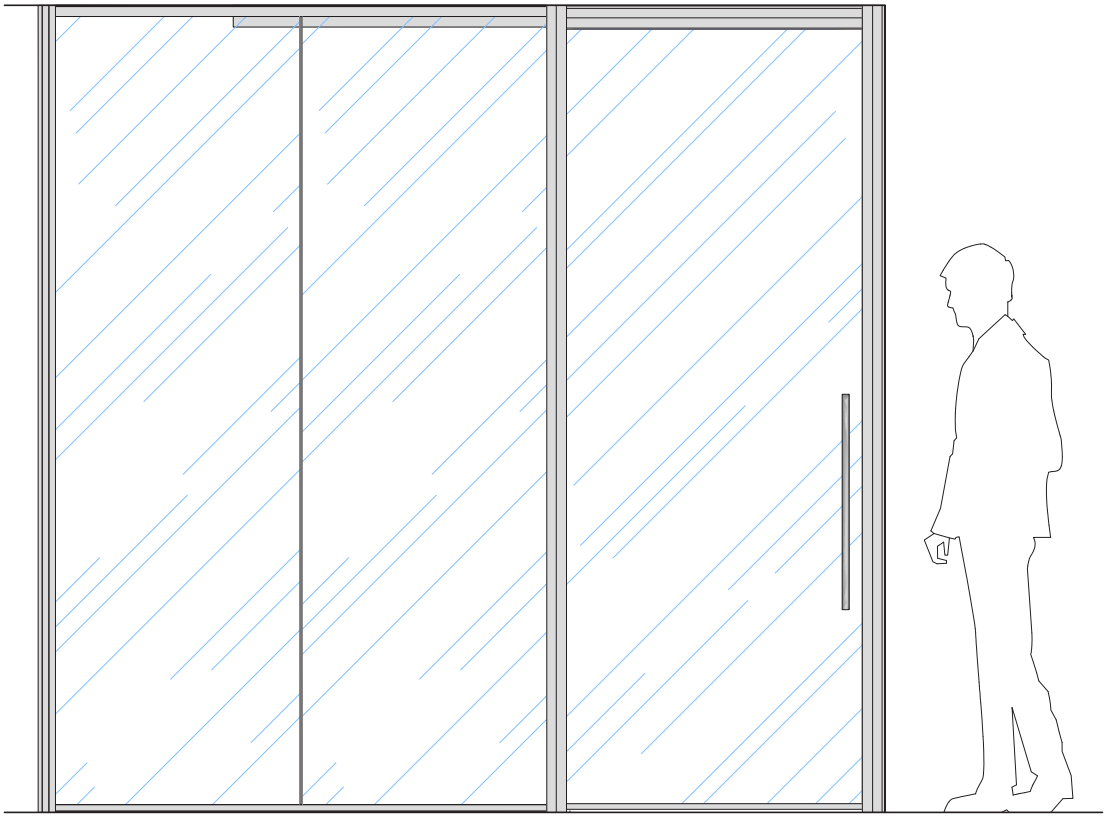

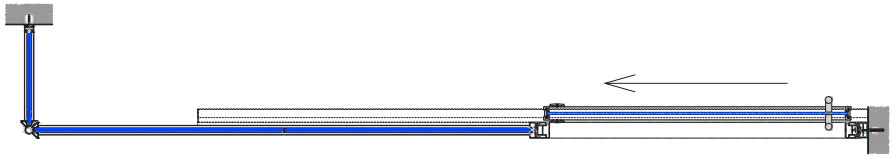

- Install the vertical handles on the door
- Use a plastic clamp to squeeze the handles before tightening the grub screws